Operating Manual

AMAZONE

UF 1002 UF 1302
UF 1602 UF 2002

Mounted field sprayer with Comfort Package CP

MG7618
BAG00225.10 02.25
vPrinted in Germany

SmartLearning

Please read this operating manual before commissioning. Keep it in a safe place for future use.

en_US

Reading the instruction

Manual and following it should seem to be inconvenient and superfluous as it is not enough to hear from others and to realize that a machine is good, to buy it and to believe that now everything should work by itself. The person in question would not only harm himself but also make the mistake of blaming the machine for possible failures instead of himself. In order to ensure success one should enter the mind of a thing, make himself familiar with every part of the machine and get acquainted with how it's handled. Only in this way could you be satisfied both with the machine and with yourself. This goal is the purpose of this instruction manual.

Leipzig-Plagwitz 1872.

Identification data

Manufacturer:	AMAZONEN-WERKE H. DREYER SE & Co. KG
Machine ID no.:	
Tye	UF02
Permissible system pressure (bar)	
Year of manufacture:	
Factory:	
Basic weight (kg):	
Permissible total weight (kg):	
Maximum load (kg):	

Manufacturer's address

AMAZONEN-WERKE
H. DREYER SE & Co. KG
Postfach 51
D-49202 Hasbergen, Germany
Tel.: + 49 (0)5405 501-0
E-mail: amazone@amazone.de

Spare part orders

Spare parts lists are freely accessible in the spare parts portal at www.amazone.de.

Please send orders to your AMAZONE dealer.

Formalities of the operating manual

Document number: MG7618

Compilation date: 02.25

© Copyright AMAZONEN-WERKE H. DREYER SE & Co. KG, 2025

All rights reserved.

Reprinting, even of extracts, is only possible with the approval of AMAZONEN-WERKE H. DREYER SE & Co. KG.

This operating manual is valid for all versions of the implement.

All of the equipment is described without indicating it as special optional equipment.

A description may be provided for equipment that is not fitted on the implement or is only available in certain markets. The sales documents provide information on the equipment of your implement or consult your dealer for more detailed information.

All information in this operating manual corresponds to the state of knowledge at the time of publication. Due to ongoing development of the implement, deviations are possible between the implement and the information in this operating manual.

No claims can be made based on differences in the specifications, figures or descriptions.

Figures serve as a reference and are to be understood as representations of the principle.

If you want to sell the implement, ensure that the operating manual is supplied with the implement.

Foreword

Dear Customer,

You have chosen one of the quality products from the wide product range of AMAZONEN-WERKE, H. DREYER SE & Co. KG. We thank you for your confidence in our products.

On receiving the machine, check to see if it has been damaged during transport or if parts are missing. Using the delivery note, check that the machine has been delivered in full, including any special equipment ordered. Damage can only be rectified if problems are signalled immediately.

Before commissioning, read and understand this operating manual, and particularly the safety information. Only after careful reading will you be able to benefit from the full scope of your newly purchased machine.

Please ensure that all the machine operators have read this operating manual before the machine is commissioned.

Should you have any questions or problems, please consult this operating manual or contact your local service partner.

Regular maintenance and timely replacement of worn or damaged parts increases the lifespan of your machine.

User evaluation

Dear Reader,

We update our operating manuals regularly. Your suggestions for improvement help us to create ever more user-friendly manuals.

AMAZONEN-WERKE

H. DREYER SE & Co. KG

Postfach 51

D-49202 Hasbergen, Germany

Tel.: + 49 (0)5405 501-0

E-mail: amazone@amazone.de

1 User Information ... 10
1.1 Purpose of the document ... 10
1.2 Locations in the operating manual ... 10
1.3 Diagrams ... 10

2 General safety instructions ... 11
2.1 Obligations and liability ... 11
2.2 Representation of safety symbols ... 13
2.3 Organisational measures ... 14
2.4 Safety and protection equipment ... 14
2.5 Informal safety measures ... 14
2.6 User training ... 15
2.7 Safety measures in normal operation ... 16
2.8 Danger from residual energy ... 16
2.9 Maintenance and repair work, fault elimination ... 16
2.10 Design changes ... 16
2.10.1 Spare and wear parts and aids ... 17
2.11 Cleaning and disposal ... 17
2.12 User workstation ... 17
2.13 Warning symbols and other signs on the machine ... 18
2.13.1 Positions of warning symbols and other labels ... 19
2.14 Dangers if the safety information is not observed ... 28
2.15 Safety-conscious working ... 28
2.16 Safety information for users ... 29
2.16.1 General safety and accident prevention information ... 29
2.16.2 Hydraulic system ... 32
2.16.3 Electrical system ... 33
2.16.4 Universal joint shaft operation ... 33
2.16.5 Field sprayer operation ... 35
2.16.6 Cleaning, maintenance and repairs ... 37

3 Loading the implement ... 38
3.1 Loading the implement with a crane ... 38
3.2 Lashing the implement ... 39

4 Product description ... 40
4.1 Overview of the assemblies ... 40
4.2 Safety and protection equipment ... 42
4.3 Supply hoses between the tractor and the machine ... 43
4.4 Traffic safety equipment ... 43
4.5 Intended use ... 45
4.6 Device inspections ... 46
4.7 Consequences of using certain crop protection agents ... 46
4.8 Danger areas and danger points ... 47
4.9 Rating plate ... 48
4.10 Conformity ... 48
4.11 Technically possible maximum application rate ... 48
4.12 Maximum permissible application rate ... 49
4.13 Technical Data ... 50
4.13.1 Basic machine ... 50
4.13.1 Spraying technology ... 51
4.13.2 Technical Residue ... 53
4.13.3 Payload ... 56
4.14 Required tractor equipment ... 57

4.15 Noise emissions data 57

5 Construction and function of the basic machine 58

5.1 Function 58
5.2 Control panel 59
5.2.1 Induction bowl with injector and canister flushing 64
5.2.2 Switch taps on the induction bowl 65
5.3 Parking supports 66
5.4 Three-point attachment frame 67
5.5 Quick-coupling system 68
5.6 PTO shaft 69
5.6.1 Coupling the PTO shaft 71
5.6.2 Uncoupling the PTO shaft 72
5.7 Hydraulic connections 73
5.7.1 Coupling the hydraulic hose lines 75
5.7.2 Uncoupling the hydraulic hose lines 76
5.8 Control terminal / control computer 77
5.8.1 Control terminal 77
5.8.2 AMASPRAY+ 78
5.9 AmaPilot+ multi-function stick 78
5.10 Spray liquid tank 79
5.10.1 Maintenance platform with ladder 79
5.10.2 Suction port for filling the spray liquid tank (optional) 80
5.11 Spülwassertank 81
5.12 Hand wash facility 82
5.13 Pump equipment 83
5.14 Filter equipment 84
5.14.1 Suction filter 84
5.14.2 Self cleaning pressure filter 85
5.14.3 Nozzle filters 85
5.15 Exterior wash down kit (optional) 86
5.16 Work lights 87
5.17 Front tank FT 1001 / FT1502 87
5.18 Camera system 88
5.19 Personal protective equipment safety kit 89

6 Construction and function of the sprayer boom 90

6.1 Super-S boom 95
6.1.1 Unlocking and locking the transport safety catch 96
6.1.2 **Super-S** boom, folding via the tractor control unit 97
6.2 Q-plus boom 99
6.2.1 Unlocking and locking the transport safety catch 100
6.2.2 Q-plus boom, folding via the tractor control unit 101
6.2.3 Working on one side using the right-hand boom 102
6.3 Reduction joint on the outer boom (optional) 103
6.4 Boom width reduction (option) 104
6.5 Boom extension (option) 105
6.6 Hydraulic tilt adjustment (optional) 106
6.7 Distance Control / ContourControl 106
6.8 Spray lines 107
6.9 Nozzles 109
6.9.1 Multiple nozzles 109
6.9.2 Edge nozzles 112
6.10 Automatic single nozzle control 113
6.10.1 Single nozzle control AmaSwitch 113
6.11 Special optional equipment for liquid fertiliser 114

6.11.1 Three-ray nozzles ... 114
6.11.2 7 hole nozzles / FD- nozzles ... 115
6.11.3 Drag hose unit for liquid fertiliser (optional) ... 116

7 Commissioning ... 117
7.1 Antifreeze in the spray liquid tank ... 117
7.2 Checking the suitability of the tractor ... 118
7.2.1 Calculating the actual values for the total tractor weight, tractor axle loads and tyre load capacities, as well as the minimum ballast ... 118
7.3 Installing the PTO shaft ... 122
7.4 Adjusting the length of the PTO shaft to the tractor ... 123
7.5 Securing the tractor / machine against unintentional start-up and rolling ... 125
7.6 Adjusting the hydraulic system ... 126

8 Coupling and uncoupling the machine ... 128
8.1 Coupling the machine ... 128
8.1.1 Coupling implements with quick coupling system ... 131
8.2 Uncoupling the machine ... 134
8.2.1 Uncoupling implements with quick coupling system ... 135

9 Transportation ... 136

10 TwinTerminal for Comfort Package on the control panel ... 138

11 Using the machine ... 141
11.1 Preparing for spraying operation ... 145
11.2 Preparing the spray liquid ... 146
11.2.1 Calculating the filling and re-fill quantity ... 150
11.2.2 Filling table for remaining spray area ... 151
11.3 Filling the spray liquid tank via the filling opening ... 153
11.3.1 TwinTerminal filling diagram ... 153
11.3.2 Filling the spray liquid tank via the suction port ... 154
11.3.3 Filling the spray liquid tank through the pressure connection ... 157
11.3.4 Adjusting the agitator ... 158
11.4 Flushing in the agents ... 159
11.5 Spray agent suction from containers (closed transfer system) ... 162
11.6 Filling the flushing water tank through the pressure connection ... 163
11.7 Spraying operation ... 164
11.7.1 Applying the spray liquid ... 167
11.7.2 Driving to the field with the agitator switched on ... 167
11.7.3 Drift reduction measures ... 168
11.7.4 Diluting the spray liquid with flushing water ... 168
11.7.5 Continual internal cleaning ... 169
11.8 Residues ... 170
11.8.1 Spraying out the diluted residual quantity at the end of spraying operations ... 171
11.8.2 Emptying the spray liquid tank using the pump ... 171

12 Cleaning the implement after operation ... 172
12.1 Quick cleaning of the empty field sprayer ... 173
12.2 Intensive cleaning of the empty field sprayer ... 174
12.2.1 Draining the final residual quantities ... 176
12.3 Performing chemical cleaning ... 177
12.4 Cleaning the suction filter ... 178
12.5 Cleaning the pressure filter ... 179
12.6 Flushing the sprayer boom when the spray liquid tank is full ... 181
12.7 External cleaning ... 182

13 Faults ... 183
13.1 Eliminate the blockages in the nozzles and nozzle filters ... 185

13.2 Eliminate nozzledrip 186
13.3 Eliminating calcification in the system 187

14 Cleaning, maintenance and repairs 189

14.1 Cleaning 191
14.2 Winter storage and long periods out of operation 192
14.3 Lubrication instructions 196
14.4 Securing the raised boom 197
14.5 Maintenance schedule – overview 198
14.6 Hydraulic system 200
14.6.1 Labelling of hydraulic hose lines 201
14.6.2 Maintenance intervals 201
14.6.3 Inspection criteria for hydraulic hose lines 201
14.6.4 Installing and removing hydraulic hose lines 202
14.6.5 Fluid filter 203
14.6.6 Cleaning the solenoid valves 203
14.6.7 Clean / exchange the filter in the hydraulic plug 204
14.7 Adjusting the hydraulic throttle valve 205
14.7.1 Q-plus boom 205
14.7.2 Super-S boom 206
14.8 Adjustments on the folded-out sprayer boom 208
14.9 Pump 209
14.9.1 Checking the oil level 209
14.9.2 Changing the oil 210
14.9.3 Checking and replacing the suction and pressure-side valves 211
14.9.4 Checking and replacing piston diaphragms (workshop work) 212
14.10 Metering the field sprayer 214
14.11 Line filter 216
14.12 Replacing the diaphragm of the single-nozzle control 217
14.13 Instructions on testing the field sprayer 218
14.14 Upper and lower link pins check 221
14.1 Screw tightening torques 222
14.2 Disposing of the field sprayer 223

15 Liquid circuit 224

16 Spray table 228

16.1 Spray tables for flat-fan, anti-drift, injector and airmix nozzles, spraying height 50 cm 228
16.2 Spraying nozzles for liquid manure 232
16.3 AMAZONE spray tables - imperial system in accordance with ANSI standard 233
16.3.1 Spray table for 3-ray nozzles, spraying height 120 cm 233
16.3.2 Spray table for 7-hole nozzle 235
16.3.3 Spray table for FD nozzles 237
16.3.4 Spray table for drag hose unit 239
16.3.5 Conversion table for spraying ammonium nitrate / urea solution (AUS) liquid fertilizer 242
16.4 AMAZONE spray tables - metric system 243
16.4.1 Spray table for three-ray nozzles, spraying height 120 cm 243
16.4.2 Spray table for 7-hole nozzles 244
16.4.3 Spray table for FD- nozzles 246
16.4.4 Spray table for drag hose unit 247
16.5 Conversion table for spraying ammonium nitrate / urea solution (AUS) liquid fertiliser 250

1 User Information

The User Information section provides information on use of the operating manual.

1.1 Purpose of the document

This operating manual

- describes the operation and maintenance of the machine.
- provides important information on safe and efficient handling of the machine.
- is a component part of the machine and should always be kept with the machine or the towing vehicle.
- Keep it in a safe place for future use.

1.2 Locations in the operating manual

All the directions specified in the operating manual are always seen in the direction of travel.

1.3 Diagrams

Instructions and responses

Activities to be carried out by the user are given as numbered instructions. Always keep to the order of the instructions. The response to an instruction is given by an arrow. Example:

1. Instruction 1

→ Machine response to instruction 1

2. Instruction 2

Lists

Lists without an essential order are shown as a list with bullets. Example:

- Point 1
- Point 2

Item numbers in diagrams

Numbers in round brackets refer to the item numbers in the diagrams. The first number refers to the diagram and the second number to the item.

Example: (6) = Item 6

2 General safety instructions

This section contains important information on safe operation of the machine.

2.1 Obligations and liability

Comply with the instructions in the operating manual

Knowledge of the basic safety information and safety regulations is a basic requirement for safe handling and fault-free machine operation.

Obligations of the operator

The operator is obliged only to let those people work with/on the machine who

- are aware of the basic workplace safety information and accident prevention regulations.
- have been instructed in working with/on the machine.
- have read and understood this operating manual.

The operator is obliged

- to keep all the warning symbols on the machine in a legible state.
- to replace damaged warning symbols.
- If you still have queries, please contact the manufacturer.

Obligations of the user

Before starting work, anyone charged with working with/on the machine is obliged

- to comply with the basic workplace safety instructions and accident prevention regulations.
- to read and follow the "General safety information" section of this operating manual.
- to read the section "Warning symbols and other labels on the machine" (page 18) of this operating manual and to follow the safety instructions represented by the warning symbols when operating the machine.
- to get to know the machine.
- to read the sections of this operating manual that are important for carrying out their work.

If the user discovers that a function is not working properly, then they must eliminate this fault immediately. If this is not the task of the user or if the user does not possess the appropriate technical knowledge, then they should report this fault to their superior (operator).

Risks in handling the machine

The machine has been constructed to the state-of-the art and the recognised rules of safety. However, operating the machine may cause risks and restrictions to

- the health and safety of the user or third parties,
- the machine,
- other property.

Only use the machine

- for the purpose for which it was intended.
- in a perfect state of repair.

Eliminate any faults immediately which could impair safety.

Guarantee and liability

Our "General conditions of sales and delivery" are always applicable. These shall be available to the operator, at the latest on conclusion of the contract. Guarantee and liability claims for damage to people or property will be excluded if they can be traced back to one or more of the following causes:

- Improper use of the machine.
- Improper installation, commissioning, operation and maintenance of the machine.
- Operation of the machine with defective safety equipment or improperly attached or non-functioning safety equipment.
- Non-compliance with the instructions in the operating manual regarding commissioning, operation and maintenance.
- Unauthorised design changes to the machine.
- Insufficient monitoring of machine parts which are subject to wear.
- Improperly executed repairs.
- Disasters through the impact of foreign bodies and Acts of God.

2.2 Representation of safety symbols

Safety instructions are indicated by the triangular safety symbol and the highlighted signal word. The signal word (DANGER, WARNING, CAUTION) describes the gravity of the risk and has the following significance:

DANGER

Indicates an immediate high risk which will result in death or serious physical injury (loss of body parts or long term damage) if not avoided.

If the instructions are not followed, then this will result in immediate death or serious physical injury.

WARNING

Indicates a medium risk, which could result in death or (serious) physical injury if not avoided.

If the instructions are not followed, then this may result in death or serious physical injury.

CAUTION

Indicates a low risk which could cause minor or medium level physical injury or damage to property if not avoided.

IMPORTANT

Indicates an obligation to special behaviour or an activity required for proper machine handling.

Non-compliance with these instructions can cause faults on the machine or disturbance to the environment.

NOTE

Indicates handling tips and particularly useful information.

These instructions will help you to use all the functions of your machine in the best way possible.

2.3 Organisational measures

The operator must provide the necessary personal protective equipment as per the information provided by the manufacturer of the crop protection agent to be used, such as:

- Chemical-resistant gloves,
- Chemical-resistant overalls,
- Water-resistant footwear,
- A face mask,
- Breathing protection,
- Safety glasses;
- Skin protection agents, etc.

The operating manual

- **must always be kept at the place at which the machine is operated.**
- **must always be easily accessible for the user and maintenance personnel.**

Check all safety equipment regularly.

2.4 Safety and protection equipment

Before starting up the machine each time, all the safety and protection equipment must be properly attached and fully functional. Check all safety and protection equipment regularly.

Faulty safety equipment

Faulty or disassembled safety and protection equipment can lead to dangerous situations.

2.5 Informal safety measures

As well as all the safety information in this operating manual, comply with the general, national regulations pertaining to accident prevention and environmental protection.

When driving on public roads and routes you should comply with the statutory road traffic regulations.

2.6 User training

Only those people who have been trained and instructed may work with/on the machine. The operator must clearly specify the responsibilities of the people charged with operation and maintenance work.

People being trained may only work with/on the machine under the supervision of an experienced person.

Activity \ Person	Person specially trained for the activity[1)]	Trained operator[2)]	Person with specialist training (specialist workshop*)[3)]
Loading/Transport	X	X	X
Commissioning	--	X	--
Set-up, tool installation	--	--	X
Operation	--	X	--
Maintenance	--	--	X
Troubleshooting and fault elimination	X	--	X
Disposal	X	--	--
Legend:	X..permitted	--..not permitted	

1) A person who can assume a specific task and who can carry out this task for an appropriately qualified company.

2) Instructed persons are those who have been instructed in their assigned tasks and in the possible risks in the case of improper behaviour, have been trained if necessary, and have been informed about the necessary protective equipment and measures.

3) People with specialist technical training shall be considered as a specialist. Due to their specialist training and their knowledge of the appropriate regulations, they can evaluate the work with which they have been charged and detect possible dangers.

Comment:

A qualification equivalent to specialist training can be obtained from several years' experience in the relevant field.

If maintenance and repair work on the machine is additionally marked "Workshop work", only a specialist workshop may carry out such work. The personnel of a specialist workshop shall possess the appropriate knowledge and suitable aids (tools, lifting and support equipment) for carrying out the maintenance and repair work on the machine in a way which is both appropriate and safe.

2.7 Safety measures in normal operation

Only operate the machine if all the safety and protection equipment is fully functional.

Check the machine at least once a day for visible damage and check the function of the safety and protection equipment.

2.8 Danger from residual energy

Note that there may be residual mechanical, hydraulic, pneumatic and electrical/electronic energy on the machine.

Use appropriate measures to inform the operating personnel. You can find detailed information in the relevant sections of this operating manual.

2.9 Maintenance and repair work, fault elimination

Carry out prescribed setting, maintenance and inspection work in good time.

Secure all media such as compressed air and the hydraulic system against unintentional start-up.

Carefully fix and secure larger assemblies to lifting gear when carrying out replacement work.

Regularly check that bolted connections are firmly secured and tighten if necessary.

When the maintenance work is completed, check the function of the safety devices

2.10 Design changes

You may make no changes, expansions or modifications to the machine without the authorisation of AMAZONEN-WERKE. This also applies when welding support parts.

Any expansion or modification work shall require the written approval of AMAZONEN-WERKE. Only use modification and accessory parts approved by AMAZONEN-WERKE so that the type approval, for example, remains valid in accordance with national and international regulations.

Vehicles with an official type approval or with equipment connected to a vehicle with a valid type approval or approval for road transport according to the German road traffic regulations must be in the state specified by the approval.

WARNING

Risk of crushing, cutting, catching, being drawn in or impact from the failure of support parts.

It is strictly forbidden to

- drill holes in the frame or on the running gear.
- increase the size of existing holes on the frame or the running gear.
- weld support parts.

2.10.1 Spare and wear parts and aids

Immediately replace any machine parts which are not in a perfect state.

Only use genuine AMAZONE spare and wear parts or those approved by AMAZONEN-WERKE so that the type approval remains valid according to the national and international regulations. The use of spare and wear parts from third parties does not guarantee that they have been constructed in a way as to meet the requirements placed on them.

AMAZONEN-WERKE shall accept no liability for damage caused by the use of non-approved spare and wear parts or aids.

2.11 Cleaning and disposal

Handle and dispose of any materials used carefully, in particular

- when carrying out work on lubrication systems and equipment and
- when cleaning using solvents.

2.12 User workstation

The machine may only be operated by one person sitting in the driver's seat of the tractor.

2.13 Warning symbols and other signs on the machine

Always keep all the warning symbols on the machine clean and in a legible state. Replace illegible warning symbols. You can obtain the warning symbols from your dealer using the order number (e.g. MD 075).

Warning symbols - structure

Warning symbols indicate danger areas on the machine and warn against residual dangers. At these points, there are permanent or unexpected dangers.

A warning symbol consists of two fields:

Field 1

is a symbol describing the danger, surrounded by triangular safety symbol.

Field 2

is a symbol showing how to avoid the danger.

Warning symbols - explanation

The column **Order number and explanation** provides an explanation of the neighbouring warning symbol. The description of the warning symbols is always the same and specifies, in the following order:

1. A description of the danger.

   For example: risk of cutting

2. The consequence of non-compliance with the risk avoidance instructions.

   For example: causes serious injuries to fingers or hands.

3. Risk avoidance instructions.

   For example: only touch machine parts when they have come to a complete standstill.

2.13.1 Positions of warning symbols and other labels

Warning symbols

The following diagrams show the arrangement of the warning symbols on the machine.

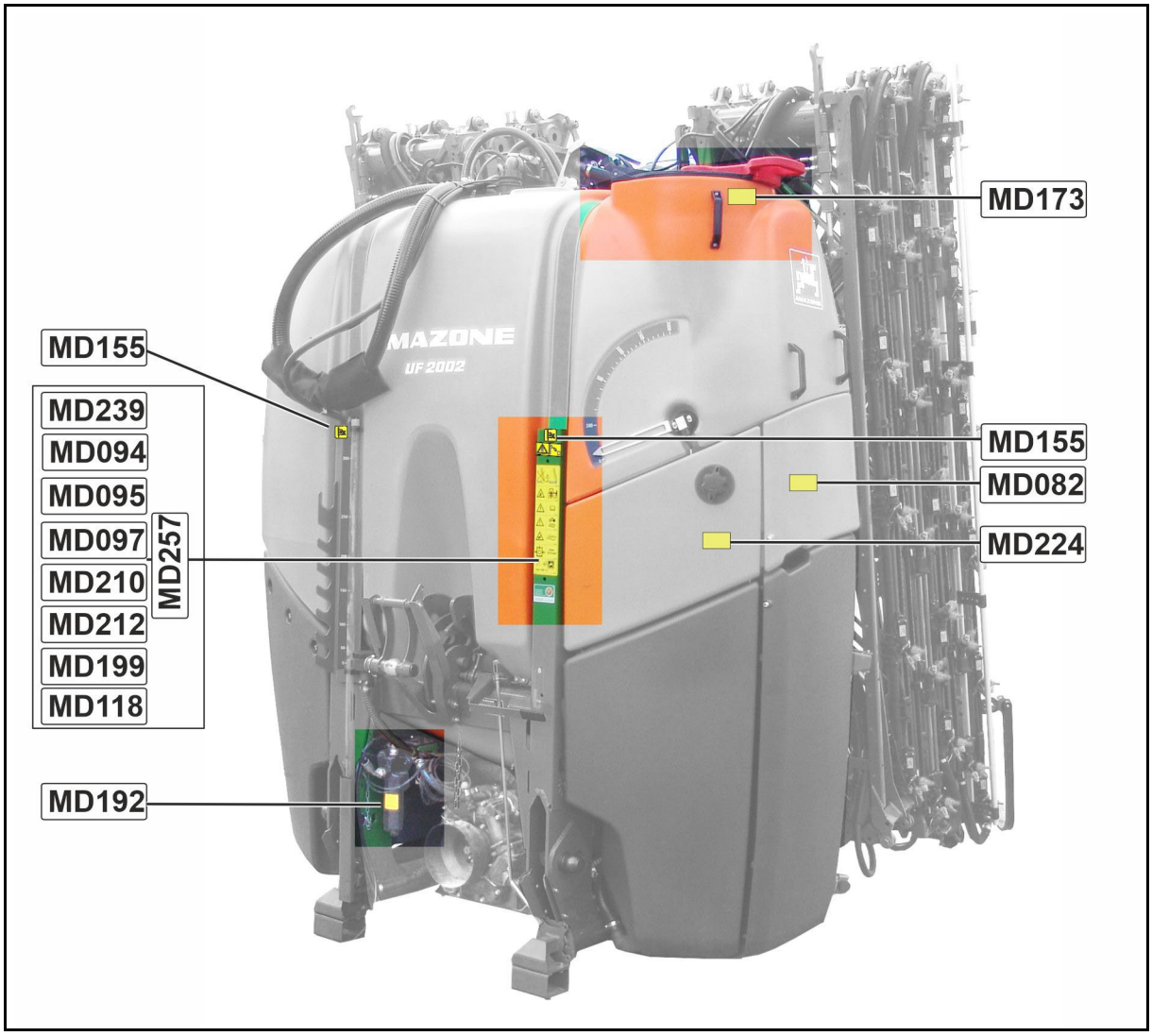

Super-S- boom

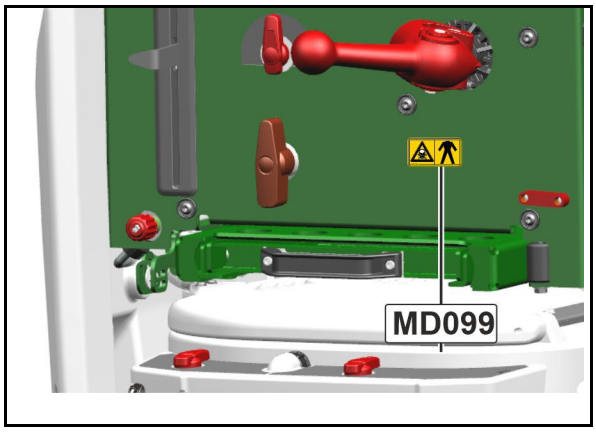

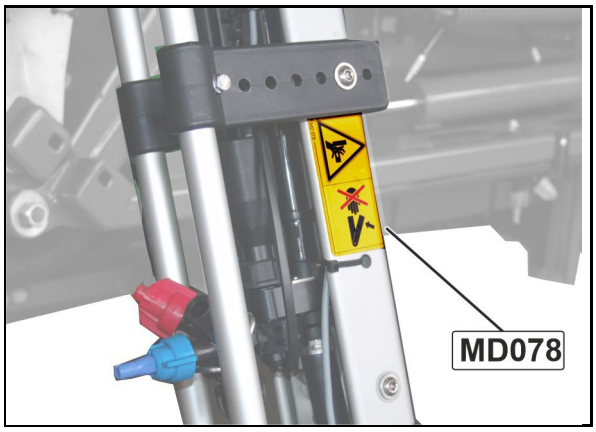

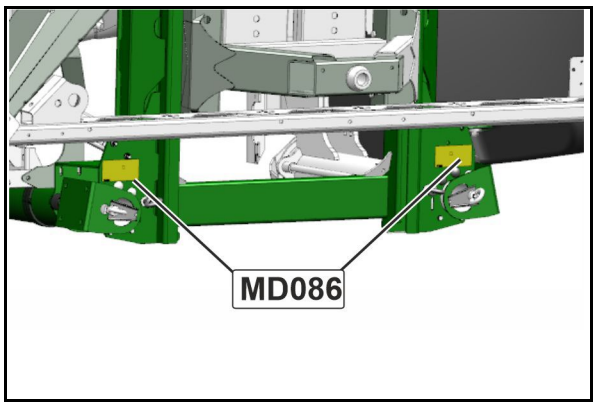

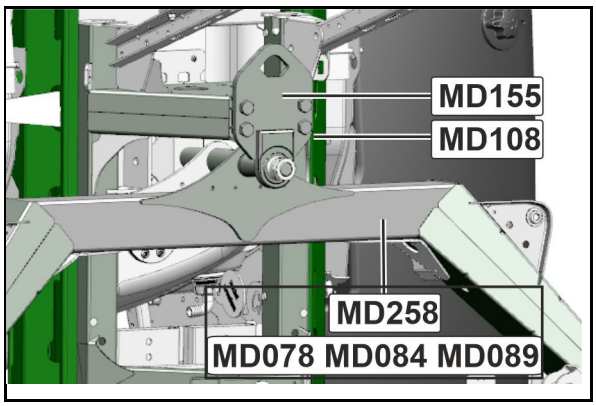

Q-Plus-boom

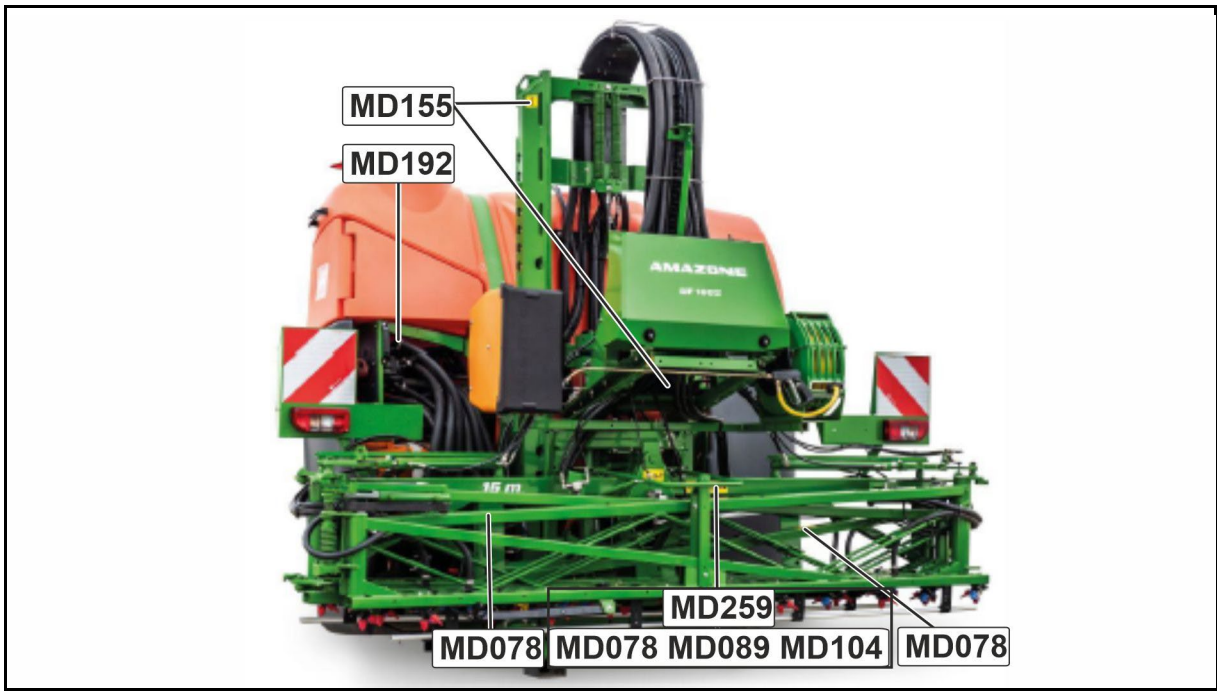

Order number and explanation	Warning symbols
MD 078 **Risk of crushing fingers or hands due to accessible moving parts in the machine.** This danger can cause extremely serious injuries and the loss of body parts. Never reach into the danger area when the tractor engine is running with PTO shaft / hydraulic / electronics system connected.	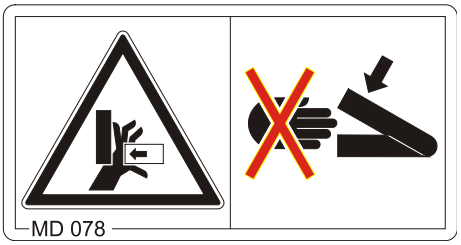
MD 082 **Risk of falling due to personnel riding on treads or platforms.** This danger can cause extremely serious and potentially fatal injuries. It is forbidden to ride on the machine or climb the machine when it is running. This also applies to machines with treads or platforms. Make sure that nobody is riding on the machine.	
MD 084 **Risk of crushing the entire body due to standing in the swivel range when machine parts are being lowered.** This danger can cause extremely serious and potentially fatal injuries. • It is forbidden to stand in the swivel range of the machine when machine parts are being lowered. • Instruct personnel to leave the swivel range of any machine parts which can be lowered before you lower the parts.	

MD 086

Risk of crushing the entire body due to necessary periods spent under raised, unsecured machine parts.

This danger can cause extremely serious and potentially fatal injuries.

Before spending time in the danger area underneath raised machine parts, secure the raised parts to prevent them being accidentally lowered.

To do this, use the mechanical support device or the hydraulic locking device.

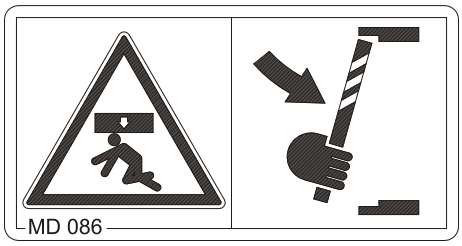

MD 089

Risk of crushing the entire body due to standing under suspended loads or raised machine parts.

This danger can cause extremely serious and potentially fatal injuries.

- It is forbidden to stand under suspended loads or raised machine parts.
- Maintain an adequate safety distance from any suspended loads or raised machine parts.
- Ensure that all personnel maintain an adequate safety distance from suspended loads or raised machine parts.

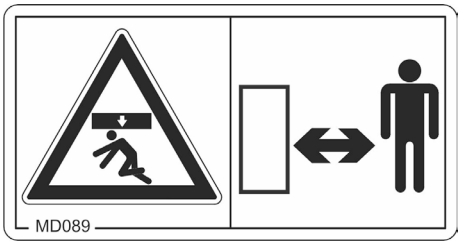

MD 094

Danger due to overhead power lines

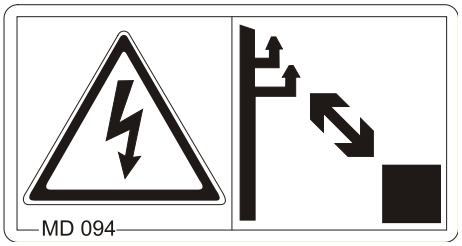

- Never touch overhead power lines with the implement.
- Maintain an adequately safe distance from overhead power lines, particularly, when folding or unfolding implement parts.
- Note that the voltage can also flash over if the safety distance is insufficient.
- Before starting work, check the operating site for overhead power lines and the associated hazards.

Nominal voltage	Safety distance from transmission lines
up to 1 kV	1 m
over 1 up to 110 kV	2 m
over 110 up to 220 kV	3 m
over 220 up to 380 kV	4 m

MD 095

Read and follow the operating manual and safety information before starting up the machine!

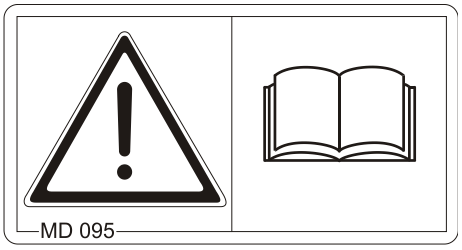

MD 097

Risk of crushing the entire body due to standing in the stroke area of the three-point suspension when the three-point hydraulics are actuated.

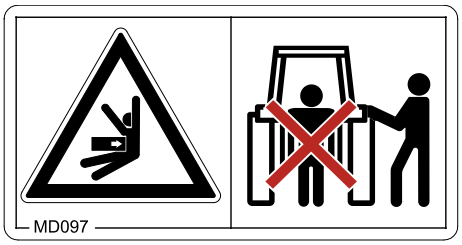

This danger can cause extremely serious and potentially fatal injuries.

- Personnel are prohibited from entering the stroke area of the three-point suspension when the three-point hydraulics are actuated.
- Only actuate the operator controls for the tractor's three-point hydraulic system
  - from the intended workstation.
  - if you are outside of the stroke area between the tractor and the machine.

MD 099

Risk of contact with hazardous materials due to improper handling.

Causes serious, potentially fatal injuries anywhere on the body.

Put on the personal protective equipment.

Before coming into contact with hazardous materials, put on protective clothing. Follow the manufacturer's safety instructions for the materials to be processed

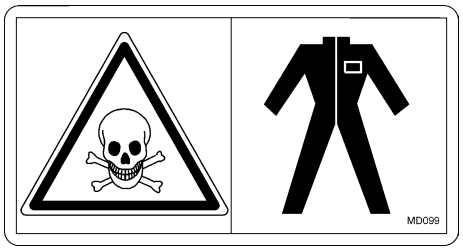

MD 100

This symbol indicates anchorage points for fastening slinging gear when loading the machine.

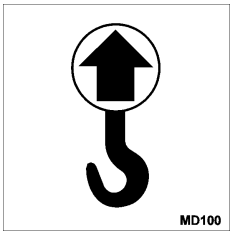

MD 104

Risk of crushing the entire body or impacts due to standing in the swivel range of laterally moving machine parts.

These dangers can cause extremely serious and potentially fatal injuries.

- Maintain an adequate safety distance from moving machine parts while the tractor engine is running.
- Please ensure that all personnel maintain a sufficient safety distance from moving machine parts.

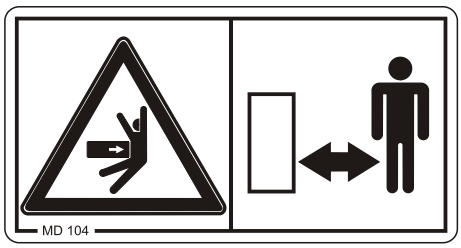

MD 108

Severe injuries due to incorrect handling of the pressurized hydraulic accumulator

- Have pressurized hydraulic accumulators checked and repaired by a qualified specialist workshop only.

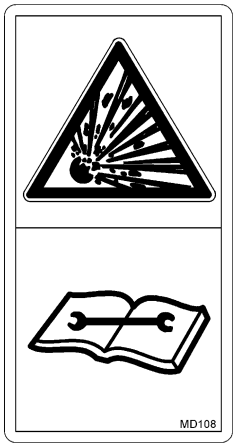

MD 118

This symbol identifies the maximum drive speed (max. 540 rpm) and direction of rotation of the machine drive shaft.

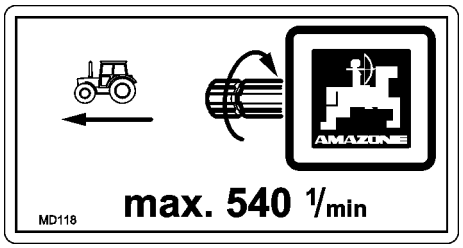

MD 153

This symbol indicates a hydraulic fluid filter.

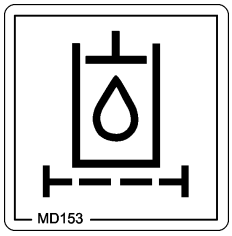

MD 155

This icon designates the restraint points for tieing the implement to a transport vehicle allowing the implement to be transported in a safe manner.

MD 173

Risk of breathing in hazardous materials via poisonous vapours from the spray liquid tank.

This danger can cause extremely serious and potentially fatal injuries.

Never climb into the spray liquid tank.

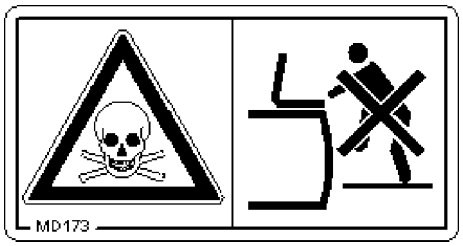

MD 192

Danger of fluids escaping under high pressure while working on hoses and connections under pressure!

This can result in extremely serious injuries on all parts of the body.

It is not allowed to work on this component.

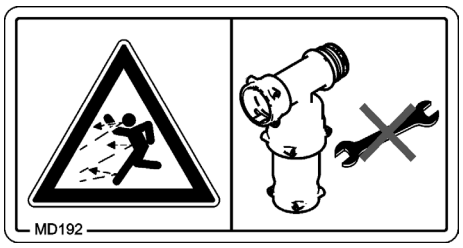

MD 199

The maximum operating pressure of the hydraulic system is 210 bars.

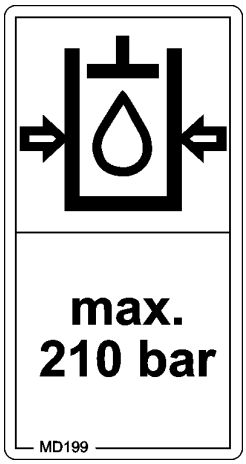

MD 210

Danger from intervention in the machine, e.g. installation, adjusting, troubleshooting, cleaning, maintaining and repairing, due to the tractor and the machine being started unintentionally and rolling.

These dangers can cause extremely serious and potentially fatal injuries.

- Secure the tractor and the machine against unintentional start-up and rolling before any intervention in the machine.
- Depending on the type of intervention, read and observe the information in the relevant sections of the operating manual.

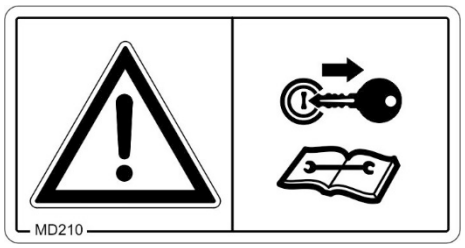

MD 212

Risk of infection due to hydraulic fluid escaping under high pressure!

- Have the hydraulic system tested and repaired by a qualified specialist workshop only.
- Stay away from leak points in the hydraulic system.
- If you are injured by hydraulic fluid, get medical attention immediately.

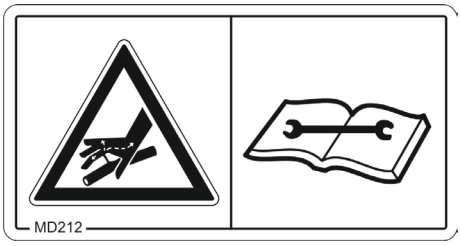

MD 224

Risk of contact with hazardous materials due to improper use of clear fresh water from the hand wash tank.

This danger can cause extremely serious and potentially fatal injuries.

Never use the clear fresh water from the hand wash tank as drinking water.

MD 239

Danger from insufficient stability of the unhitched field sprayer attachment due to improper uncoupling.

These dangers can cause extremely serious and potentially fatal injuries.

- Before uncoupling the field sprayer attachment, always pull the parking supports out of their transport position into the parking position.

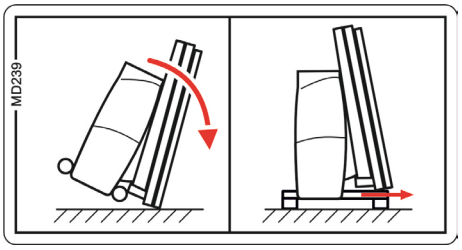

2.14 Dangers if the safety information is not observed

Non-compliance with the safety information

- can pose both a danger to people and also to the environment and machine.
- can lead to the loss of all warranty claims.

In particular, non-compliance with the safety information could pose the following risks:

- Danger to people through non-secured working areas.
- Failure of important machine functions.
- Failure of prescribed methods of maintenance and repair.
- Danger to people through mechanical and chemical influences.
- Risk to the environment through leakage of hydraulic fluid.

2.15 Safety-conscious working

Besides the safety information in this operating manual, the generally applicable national workplace safety and accident prevention regulations are binding.

Comply with the accident prevention instructions on the warning symbols.

When driving on public roads and routes, comply with the appropriate statutory road traffic regulations.

2.16 Safety information for users

WARNING

Risk of crushing, cutting, catching, being drawn in or impacts from inadequate roadworthiness and operational safety.

Before starting up the machine and the tractor, always check their roadworthiness and operational safety.

2.16.1 General safety and accident prevention information

- Beside these instructions, comply with the generally applicable national safety and accident prevention regulations.
- The warning symbols and other labels attached to the machine provide important information on safe machine operation. Compliance with this information is in the interests of your safety.
- Before moving off and starting up the machine, check the immediate area of the machine (children). Ensure that you can see clearly.
- It is forbidden to ride on the machine or use it as a means of transport.
- Drive in such a way that you always have full control over the tractor with the attached machine.

  In so doing, take your personal abilities into account, as well as the road, traffic, visibility and weather conditions, the driving characteristics of the tractor and the connected machine.

Coupling and uncoupling the machine

- Only connect and transport the machine with tractors suitable for the task.
- When coupling machines to the tractor's three-point linkage, the linkages of the tractor and the machine must always be the same.
- Connect the machine to the prescribed equipment in accordance with the specifications.
- When coupling machines to the front or the rear of the tractor, the following may not be exceeded:
  - The approved total tractor weight
  - The approved tractor axle loads
  - The approved load capacities of the tractor tyres
- Secure the tractor and the machine against rolling unintentionally before coupling or uncoupling the machine.
- It is forbidden for people to stand between the machine to be coupled and the tractor whilst the tractor is moving towards the machine.
  Any helpers may only act as guides standing next to the vehicles, and may only move between the vehicles when both are at a standstill.
- Before connecting the machine to or disconnecting the machine from the tractor's three-point linkage, secure the operating lever of the tractor hydraulic system so that unintentional raising or lowering is prevented.

- When coupling and uncoupling machines, move the support equipment (if available) to the appropriate position (stability).
- When actuating the support equipment, there is a risk of injury from crushing and cutting points.
- Be particularly careful when coupling the machine to the tractor or uncoupling it from the tractor. There are crushing and cutting points in the area of the coupling point between the tractor and the machine.
- It is forbidden to stand between the tractor and the machine when actuating the three-point linkage.
- Coupled supply lines
  - must give slightly to all movements while cornering without tensioning, kinking or rubbing.
  - must not chafe against other parts.
- The release ropes for quick couplings must hang loosely and must not release themselves when lowered.
- Also ensure that uncoupled machines are stable.

Use of the machine

- Before starting work, ensure that you understand all the equipment and actuation elements of the machine and their function. There is no time for this when the machine is already in operation.
- Do not wear loose-fitting clothing. Loose clothing increases the risk of being caught by the drive shaft.
- Only start-up the machine, when all the safety equipment has been attached and is in the safety position.
- Comply with the maximum load for the connected machine and the permissible axle and drawbar loads for the tractor. If necessary, drive only with a partially filled tank.
- It is forbidden to stand in the working area of the machine.
- It is forbidden to stand in the turning and swivel range of the machine.
- There are crushing and cutting points at externally-actuated (e.g. hydraulic) machine points.
- Only actuate externally-actuated machine parts when you are sure that no-one is standing within the prescribed safety distance.
- Before leaving the tractor,
  - lower the machine onto the ground
  - switch off the tractor engine
  - remove the ignition key

Machine transportation

- Comply with the national road traffic regulations when using public highways.
- Before moving off, check:
  - the correct connection of the supply lines
  - the lighting system for damage, function and cleanliness
  - the brake and hydraulic system for visible damage
  - that the parking brake is completely disengaged
  - the function of the brake system
- Ensure that the tractor has sufficient steering and braking power.

  Any machines and front/rear weights connected to the tractor influence the driving behaviour and the steering and braking power of the tractor.
- If necessary, use front weights.

  The front tractor axle must always be loaded with at least 20% of the tractor empty weight, in order to ensure sufficient steering power.
- Always fix the front or rear weights to the intended fixing points according to regulations.
- Comply with the maximum load for the connected machine and the approved axle and drawbar loads for the tractor.
- The tractor must guarantee the prescribed brake delay for the loaded vehicle combination (tractor plus connected machine).
- Check the brake power before moving off.
- When turning corners with the machine connected, take the broad load and balance weight of the machine into account.
- If the machine is fixed to the tractor's three-point linkage or lower links, before moving off, ensure sufficient side locking of the tractor lower links.
- Before moving off, move all the swivellable machine parts to the transport position.
- Before moving off, secure all swivellable machine parts in the transport position against dangerous position changes. Use the transport safety catches intended for this.
- Before moving off, secure the operating lever of the three-point hydraulic system against the unintentional raising or lowering of the connected machine.
- Check that the transport equipment, e.g. lighting, warning equipment and protective equipment, is correctly mounted on the machine.
- Carry out a visual check that the upper and lower link pins are firmly fixed with the linchpin against unintentional release.
- Adjust your driving speed to the prevailing conditions.
- Before driving downhill, switch to a low gear.
- Before moving off, always switch off independent wheel braking (lock the pedals).

2.16.2 Hydraulic system

- The hydraulic system is under a high pressure.
- Ensure that the hydraulic hose lines are connected correctly.
- When connecting the hydraulic hose lines, ensure that the hydraulic system is depressurised on both the machine and tractor sides.
- It is forbidden to lock the operator controls on the tractor used for hydraulic and electrical movements of components, e.g. folding, swivelling and pushing movements. The movement must stop automatically when you release the appropriate control. This does not apply to equipment movements that
  - are continuous
  - are automatically controlled
  - require a floating position or pressed position to function
- Before working on the hydraulic system,
  - lower the machine
  - depressurise the hydraulic system
  - shut off the tractor engine
  - apply the parking brake
  - remove the ignition key
- Have the hydraulic hose lines checked at least once a year by an expert to ensure they are in safe working order. Replace the hydraulic hose lines if they are damaged or worn. Only use genuine AMAZONE hydraulic hose lines.
- The hydraulic hose lines should not be used for longer than six years, including any storage time of maximum two years. Even with proper storage and approved use, hoses and hose connections are subject to natural ageing, thus limiting storage time and the length of use. However, it may be possible to specify the length of use from experience values, in particular when taking the risk potential into account. In the case of hoses and hose connections made from thermoplastics, other guide values may be decisive.
- Never attempt to plug leaks in hydraulic hose lines using your hand or fingers.

  Escaping high pressure fluid (hydraulic fluid) may pass through the skin and ingress into the body, causing serious injuries.

  If you are injured by hydraulic fluid, contact a doctor immediately. Risk of infection
- When searching for leaks, use suitable aids to avoid the serious risk of infection.

2.16.3 Electrical system

- When working on the electrical system, always disconnect the battery (negative terminal).
- Only use the prescribed fuses. If fuses are used that are too highly rated, the electrical system will be destroyed – risk of fire.
- Ensure that the battery is connected correctly - firstly connect the positive terminal and then connect the negative terminal. When disconnecting the battery, disconnect the negative terminal first, followed by the positive terminal.
- Always place the appropriate cover over the positive battery terminal. If there is accidental earth contact, there is a risk of explosion.
- Risk of explosion. Avoid sparking and naked flames in the area of the battery.
- The machine may be equipped with electronic components whose function is influenced by electromagnetic interference from other units. Such interference can pose risks to people, if the following safety information is not followed.
  - If retrofitting electrical units and/or components on the machine with a connection to the on-board power supply, the user is responsible for checking whether the installation might cause faults on the vehicle electronics or other components.
  - Ensure that the retrofitted electrical and electronic components comply with the EMC directive 2014/30/EC in the appropriate version and bear the CE mark.

2.16.4 Universal joint shaft operation

- Use only the PTO shafts prescribed by the AMAZONEN-WERKE factories, equipped with the proper safety devices.
- Also read and follow the operating manual from the PTO shaft manufacturer.
- The protective tube and PTO shaft guard must be undamaged, and the shield of the tractor and machine universal joint shaft must be attached and be in proper working condition.
- Work is prohibited while the safety devices are damaged.
- You may install or remove the PTO shaft only after you have done all of the following:
  - Switched off the universal joint shaft
  - Switched off the tractor engine
  - Applied the parking brake
  - Removed the ignition key
- Always ensure that the PTO shaft is installed and secured correctly.
- When using wide-angle PTO shafts, always install the wide angle joint at the pivot point between the tractor and machine.
- Secure the PTO shaft guard by attaching the chain(s) to prevent movement.

- Observe the prescribed pipe overlaps in transport and operational positions. (Read and follow the operating manual from the PTO shaft manufacturer.)
- When turning corners, observe the permitted bending and displacement of the PTO shaft.
- Before switching on the universal joint shaft, check that the selected universal joint shaft speed of the tractor matches the permitted drive speed of the machine.
- Instruct people to leave the danger area of the machine before you switch on the universal joint shaft.
- While work is being carried out with the universal joint shaft, there must be no one in the area of the universal joint or PTO shaft while it is turning.
- Never switch on the universal joint shaft while the tractor engine is shut off.
- Always switch off the universal joint shaft whenever excessive bending occurs or it is not needed.
- WARNING! After the universal joint shaft is switched off, there is a danger of injury from the continued rotation of freewheeling machine parts.

  Do not approach the machine too closely during this time. You may work on the machine only after all machine parts have come to a complete stop.
- Secure the tractor and machine against unintentional starting and unintentional rolling before you perform any cleaning, servicing or maintenance work on universal joint shaft-driven machines or PTO shafts.
- After decoupling the PTO shaft, place it on the holder provided.
- After removing the PTO shaft, attach the protective sleeve to the universal joint shaft stub.
- When using the travel-dependent universal joint shaft, note that the universal joint shaft speed depends on the drive speed, and that the direction of rotation reverses when you drive in reverse.

2.16.5 Field sprayer operation

- Comply with the recommendations provided by the manufacturer of the crop protection product with regard to
  - o personal protective equipment
  - o warnings concerning the handling of crop protection products
  - o regulations on dosing, applications and cleaning
- Pay attention to crop protection legislation regulations!
- It is forbidden to store contaminated protective equipment, spray agent canisters and used filters in the tractor cab.
- Take off protective equipment before entering the tractor cab.
- Never open lines which are under pressure.
- The nominal volume of the spray liquid tank may never be exceeded when filling!

- When handling crop protection products, observe the requirements of the safety data sheet for the substances used as well as the guidelines for personal protective equipment. Depending on the requirement of the safety data sheet of the active substances used, the following components belong to your personal protective equipment:
  - protective clothing according to DIN 32781
  - rubber apron according to EN 14605
  - eye protection according to EN 166
  - breathing mask according to DIN EN 143/149/405/14387, at least a half-mask with combined particle filter and gas filter A1-P2 (colour code: brown-white)
  - protective gloves with cuffs according to DIN 347/388/420
  - foot protection

  Use personal protective equipment if you could come into contact with crop protection products or fertiliser during one of the following activities:
  - filling of the spray liquid tank and addition of chemicals
  - spraying
  - settings on the implement
  - emptying and cleaning the tank
  - using different chemicals
  - maintenance
- Depending on the requirements of the safety data sheet of the active substances used, wear personal protective equipment in the tractor cab.
- Tractors with Category 4 cabs are prescribed when applying certain spray agents.
- Observe the information on the compatibility of crop protection agents and substances for the field sprayer.
- Do not spray any crop protection agents which have a tendency to stick together or set.
- Do not fill field sprayers with water from bodies of water which are open to the public, for the protection of people, animals and the environment.
- Fill the field sprayer only using original AMAZONE filling devices!

2.16.6 Cleaning, maintenance and repairs

- Due to toxic vapours in the spray liquid tank, climbing into the spray liquid tank is always forbidden.
- Repair work in the spray liquid tank must only be carried out by a specialist workshop!
- Only carry out cleaning, maintenance and repair work on the machine when
  - the drive is switched off
  - the tractor engine has come to a complete stop
  - the ignition key has been removed
  - the machine connector has been removed from the on-board computer
- Regularly check the nuts and bolts for firm seating and retighten them as necessary.
- Secure the raised machine and/or raised machine parts against unintentional lowering before performing any cleaning, maintenance or repair work on the machine.
- When replacing work tools with blades, use suitable tools and gloves.
- Dispose of oils, greases and filters in the appropriate way.
- Disconnect the cable to the tractor generator and battery before carrying out electrical welding work on the tractor and on attached machines.
- Spare parts must meet at least the specified technical requirements of AMAZONEN-WERKE. This is ensured through the use of genuine AMAZONE spare parts.
- When repairing field sprayers which have been used for liquid fertiliser application with ammonium nitrate / urea solution, observe the following points:

  Residues of ammonium nitrate / urea solutions may form salts by the evaporation of the water on or in the spray liquid tank. This produces pure ammonium nitrate and urea. In its undiluted form, ammonium nitrate is explosive when combined with organic substances, e.g. urea, and subjected to critical temperatures during repair work (e.g. welding, grinding, filing).

  This danger can be eliminated by thoroughly washing out the spray liquid tank or the parts intended for repair with water, because the salt of the ammonium nitrate / urea solution is water-soluble. For this reason, clean the field sprayer thoroughly with water before carrying out repair work.

3 Loading the implement

3.1 Loading the implement with a crane

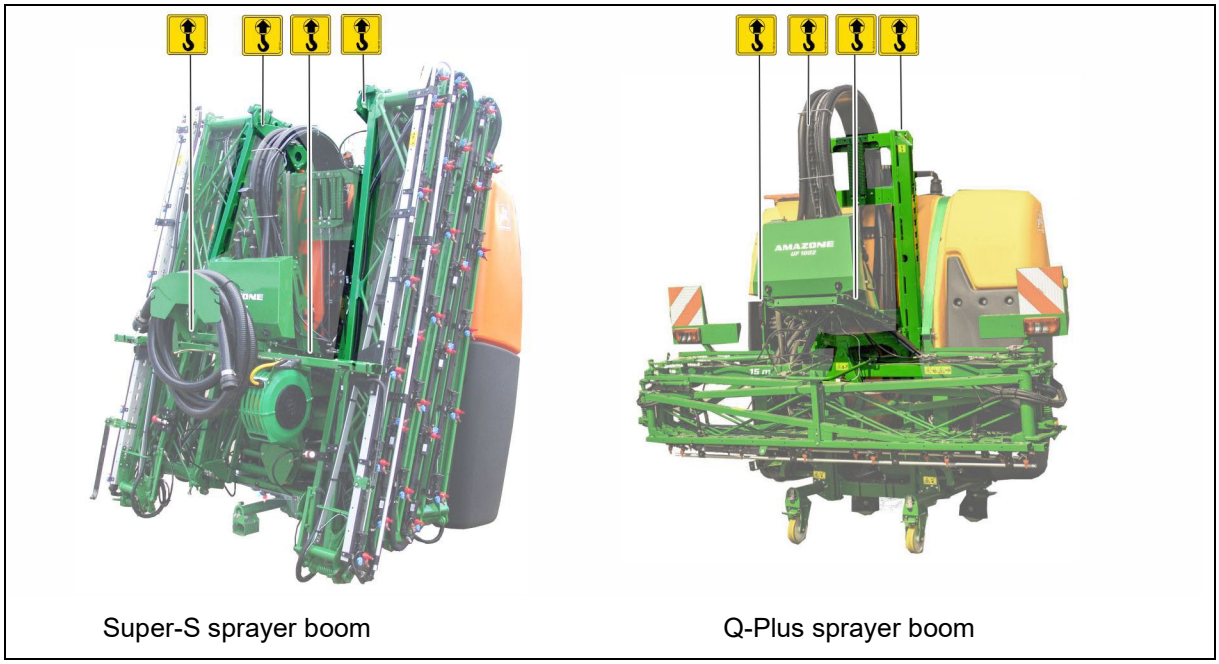

Super-S sprayer boom

Q-Plus sprayer boom

Fig. 1

The implement has 4 attachment points for sling gear for lifting.

WARNING

Risk of accident due to improperly attached sling gear for lifting.

If the slings are not attached at the marked attachment points, the implement can be damaged when lifting and can endanger safety.

- Only attach the sling gear for lifting at the marked attachment points.

3.2 Lashing the implement

Super-S sprayer boom

Q-Plus sprayer boom

Fig. 2

Depending on the equipment, the implement has 3 or 4 lashing points for lashing straps.

WARNING

Risk of accident due to improperly attached lashing straps
If lashing straps are not attached at the marked lashing points, the implement can be damaged when lashing, and this may compromise safety.

- Attach the lashing straps only at the marked lashing points.

1. Place the implement on the transport vehicle.
2. Attach the lashing straps at the marked lashing points.
3. Lash the implement in compliance with the national regulations for securing loads.

4 Product description

4.1 Overview of the assemblies

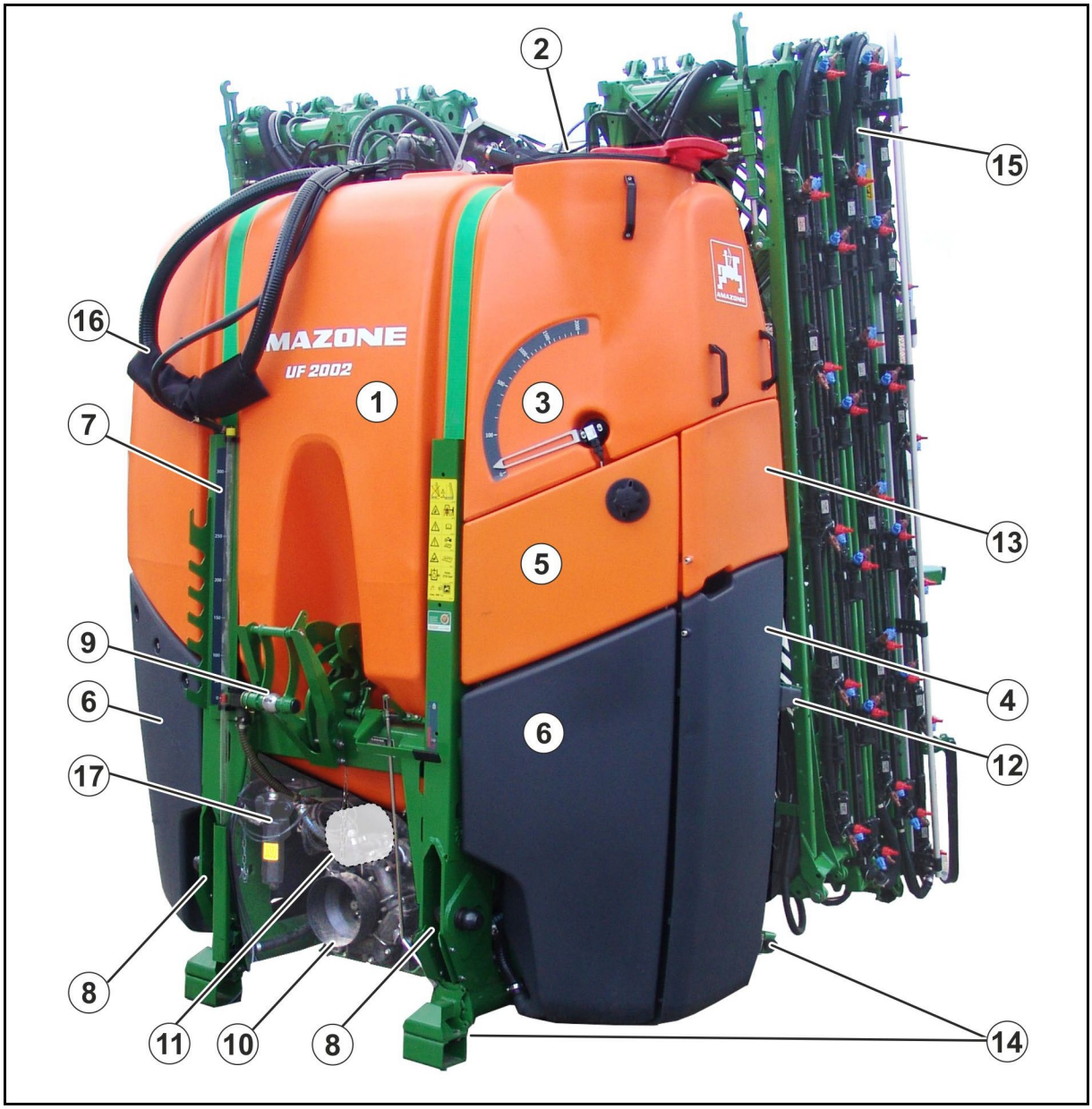

(1) Spray liquid tank

(2) Inspection hatch of the spray liquid tank for visual inspection

(3) Spray liquid tank fill level indicator

(4) Operating valve chest with cover

(5) Hand wash tank

(6) Two-part flushing water tank

(7) Flushing water tank fill level indicator

(8) Lower coupling point

(9) Upper coupling point / quick-coupling system

(10) Sprayer and agitator pump

(11) Flushing water pump

(12) Parking position for hook tool of the parking supports

(13) Transport box for separate storage of contaminated and non-contaminated protective equipment

(14) Telescopic parking device

(15) Folding sprayer boom

(16) Connecting hose front tank / FlowControl

(17) Hydraulic block and oil filter

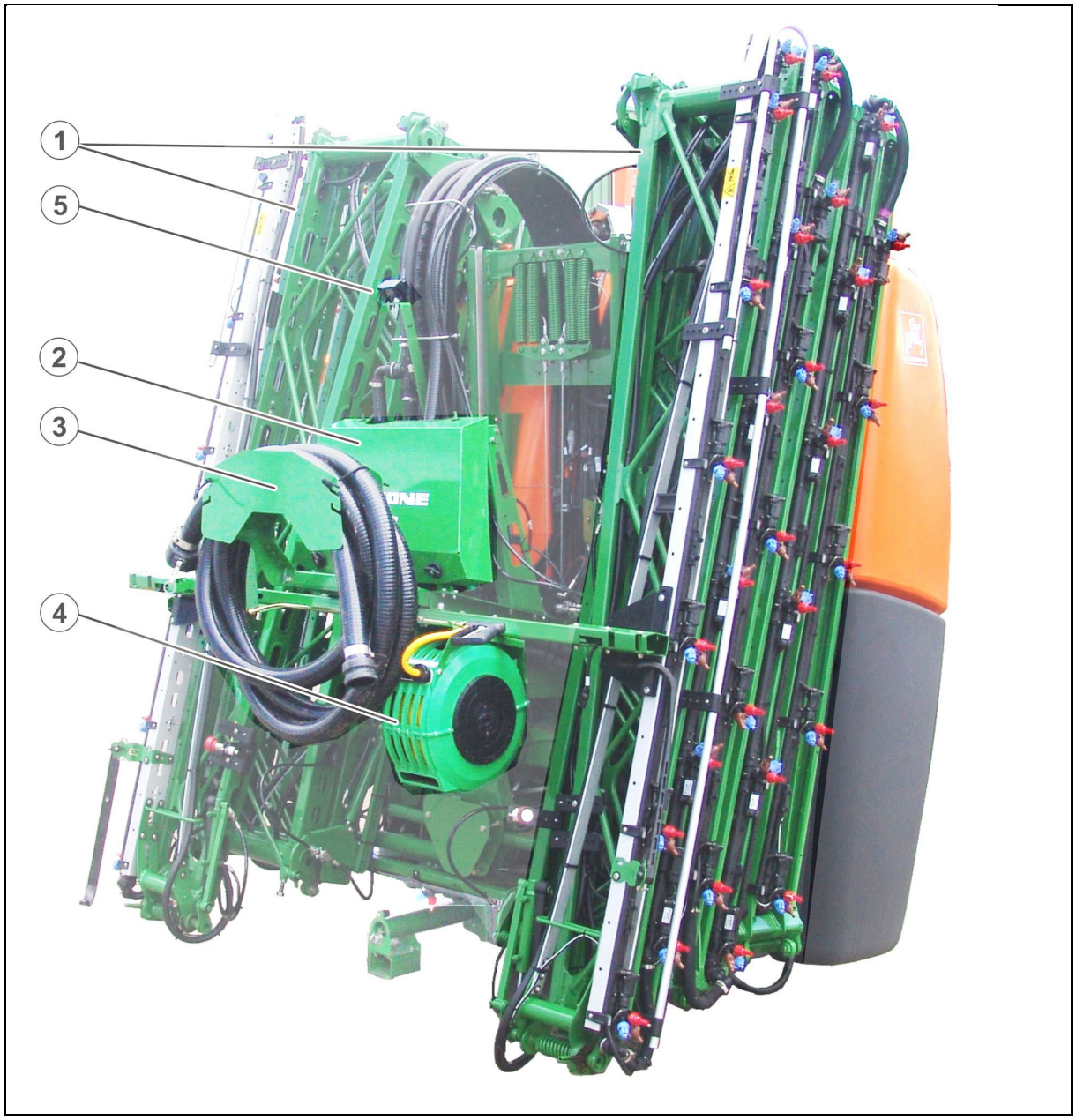

(1) Folding sprayer boom

(2) Part width section fittings

(3) Shelf for the suction hose

(4) Outer rinsing unit

(5) Rear camera

4.2 Safety and protection equipment

- Left and right-hand parking supports to prevent the machine from falling over when parked

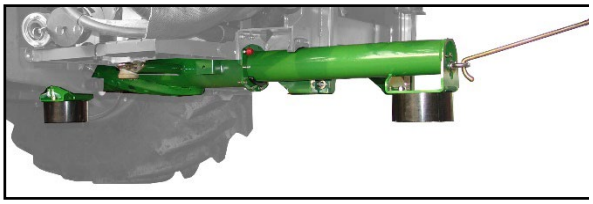

- Transport locking mechanism to prevent the Super-S boom from folding out unintentionally

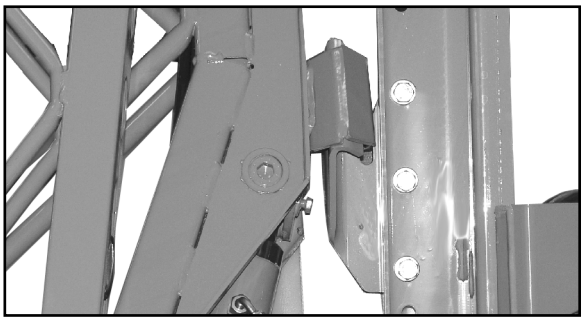

(1) Visual check of the Super-S boom lock

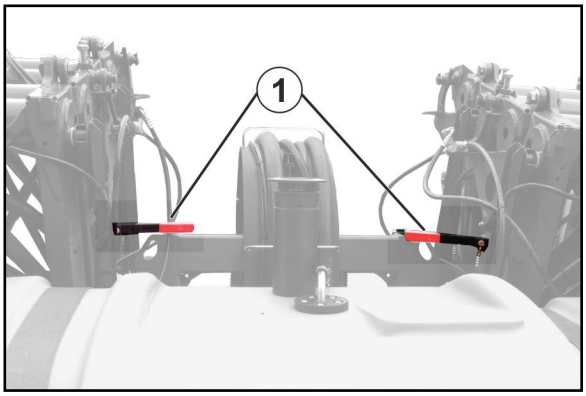

(1) Transport locking mechanism to prevent the Q-plus boom from folding out unintentionally

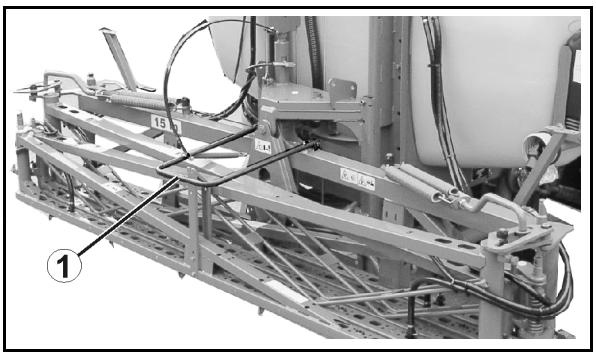

(1) PTO shaft guard

(2) Machine PTO shaft guard

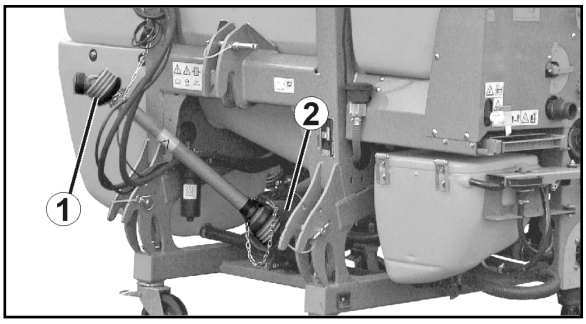

4.3 Supply hoses between the tractor and the machine

Supply hoses in parking position:

(1) Hydraulic hose lines (depending on equipment provided)

(2) Cable with connection for lighting

(3) Computer cable with machine connector

4.4 Traffic safety equipment

Rear lighting Super S -- sprayer boom

(1) Flashing warning / turn signal amber lamp

(2) Tail red lamp

(3) Reflector, red

(4) Slow Moving Vehicle Emblem

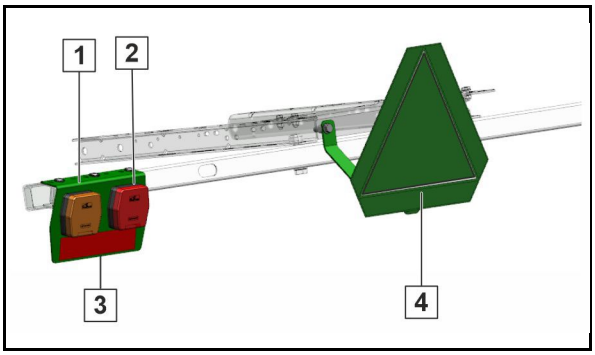

Rear lighting Q-plus -- sprayer boom

(1) Flashing warning / turn signal amber lamp

(2) Reflector, red

(3) Tail red lamp

(4) Slow Moving Vehicle Emblem

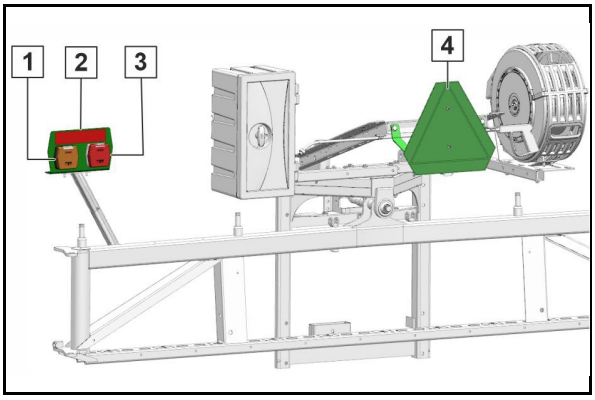

Lighting towards the front

(1) Reflector, yellow

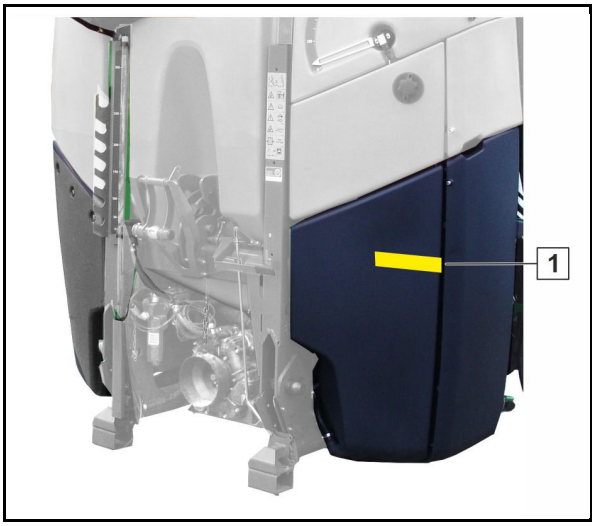

	Connect the lighting system via the connector to the 7-pin tractor socket.

	One additional warning sign on each side in France.

4.5 Intended use

The field sprayer

- is intended for the transport and application of crop protection agents (insecticide, fungicide, herbicide, etc.) in suspension, emulsion or as a mixture, and of liquid fertilisers.
- is designed exclusively for agricultural use for treating field crops.
- is attached to the tractor's three-point hydraulic system and operated by one person.

The pH value of the spray liquid to be applied (particularly liquid fertiliser) must be greater than 1.5.

Restrictions for use on slopes

(1) Driving on slopes with a full spray liquid tank

(2) Driving on slopes with a partially full spray liquid tank

(3) Application of residual quantities

(4) Turning

(5) Folding the sprayer boom

	(1)	(2)	(3)	(4)	(5)
Across a slope	15%	15%	15%	15%	20%
Up/down the slope	15%	30%	15%	15%	20%

The intended use also includes:

- Compliance with all the instructions in this operating manual.
- Execution of inspection and maintenance work.
- Exclusive use of genuine AMAZONE spare parts.

Other uses to those specified above are forbidden and shall be considered as improper.

For any damage resulting from improper use:

- the operator bears the sole responsibility,
- the manufacturer will assume no liability whatsoever.

4.6 Device inspections

The implement underlies the European Union universally applicable regular device inspections (Crop Protection Directive 2009/128/EC and EN ISO 16122).

Have the device inspected at regular intervals by a recognised and certified inspection workshop.

The date for performing the next device inspection is written on the inspection plate on the implement.

Fig. 3: German inspection plate

Fig. 3

4.7 Consequences of using certain crop protection agents

We would like to draw attention to the fact that extended exposure (20 hours) to crop protection agents with which we are familiar, e.g. Lasso, Betanal and Tramat, Stomp, Iloxan, Mudecan, Elancolan and Teridox, can cause damage to the pump diaphragms, hoses, spray lines and tanks. The examples given are in no way intended to represent a comprehensive list.

In particular, we warn against unauthorised mixtures of two or more different crop protection agents.

Substances which have a tendency to stick together or set must not be applied.

When using such aggressive crop protection agents, it is recommended that the spray liquid be applied immediately after preparation and then that the sprayer be thoroughly cleaned with water.

Desmopan diaphragms may be supplied as a replacement for the pump diaphragms. These are resistant to solvent-containing crop protection agents. However their service life is reduced by use at low temperatures (e.g. AUS in frosty conditions).

The materials and components used in the construction of AMAZONE field sprayers are safe for liquid fertiliser.

4.8 Danger areas and danger points

The danger area is the area around the machine in which people can be caught by:

- work movements made by the machine and its tools
- materials or foreign bodies thrown out of the machine
- tools rising or falling unintentionally
- unintentional rolling of the tractor and the machine

Within the machine danger area, there are danger points with permanent or unexpected risks. Warning symbols indicate these danger points and warn against residual dangers, which cannot be eliminated for practical reasons. In such cases, the special safety regulations in the appropriate section are valid.

No-one may stand in the machine danger area:

- if the tractor engine is running with the PTO shaft / hydraulic system connected.
- if the tractor and machine are not protected against unintentional start-up and rolling.

The operating person may only move the machine or switch or drive the tools from the transport position to the working position or vice-versa when there is no-one in the machine danger area.

Danger points exist:

- between the tractor and the field sprayer attachment, especially when coupling and uncoupling.
- near moving parts.
- when climbing onto the machine.
- in the swivel range of the sprayer boom.
- in the spray liquid tank due to poisonous vapours.
- underneath raised, unsecured machines or machine parts.
- when unfolding/folding the sprayer boom in the vicinity of overhead electricity cables, through contact with the cables.

4.9 Rating plate

Machine rating plate

(1) Implement number

(2) Vehicle identification number

(3) Product

(4) Permissible technical implement weight

(5) Tare weight kg

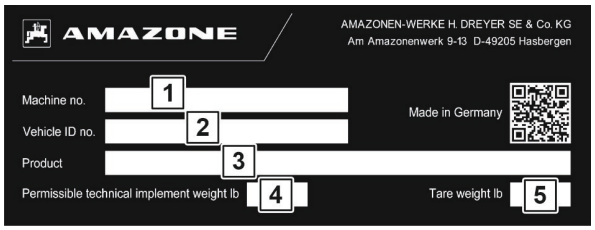

4.10 Conformity

		Directives/Standards designation	
The implement complies with the	•	Implement directive	2006/42/EC
	•	EMC directive	2014/30/EC

4.11 Technically possible maximum application rate

The application rate of the machine is limited by the following factors:

- maximum flow to the sprayer boom of 53 gpm [200 l/min] (HighFlow 106 gpm / 400 l/min).
- maximum flow per part-width section of 6.6 gpm [25 l/min] (with 2 spray lines: 10.5 gpm [40 l/min] per part-width section).
- maximum flow per nozzle body of 1 gpm [4 l/min].

4.12 Maximum permissible application rate

The permissible application rate of the implement is limited by the minimum required agitator capacity.

The agitator capacity per minute should be 5% of the hopper volume.

This is particularly applicable for active substances that are hard to keep in suspension.

With active substances that are dissolved, the agitator capacity can be reduced.

Determining the permissible application rate depending on the agitator capacity

Calculation formula for the application rate in l/min:

(Agitator capacity per minute = 5% of the tank volume)

Permissible application rate gpm [l/min]	=	Pump capacity gpm [l/min] (see technical data)	- 0.05 x nominal tank volume gal [l]

Conversion of the application rate in l/ha:

1. Determine the application rate per nozzle (divide the permissible application rate by the number of nozzles).
2. Read the application rate per acre / hectare depending on the speed from the spray table (See page **231**).

Example: UF1602, Pumpe BP 235, Super S 66 ft (20 m),

40 nozzles, 6,2 mph (10 km/h)

Permissible application rate = 53 gpm – 0,05 x 423 gal = 31,85 gpm

201 l/min - 0,05 x 1600 l = 121 l/min

→ Application rate per nozzle = 0,79 gpm (3 l/min)

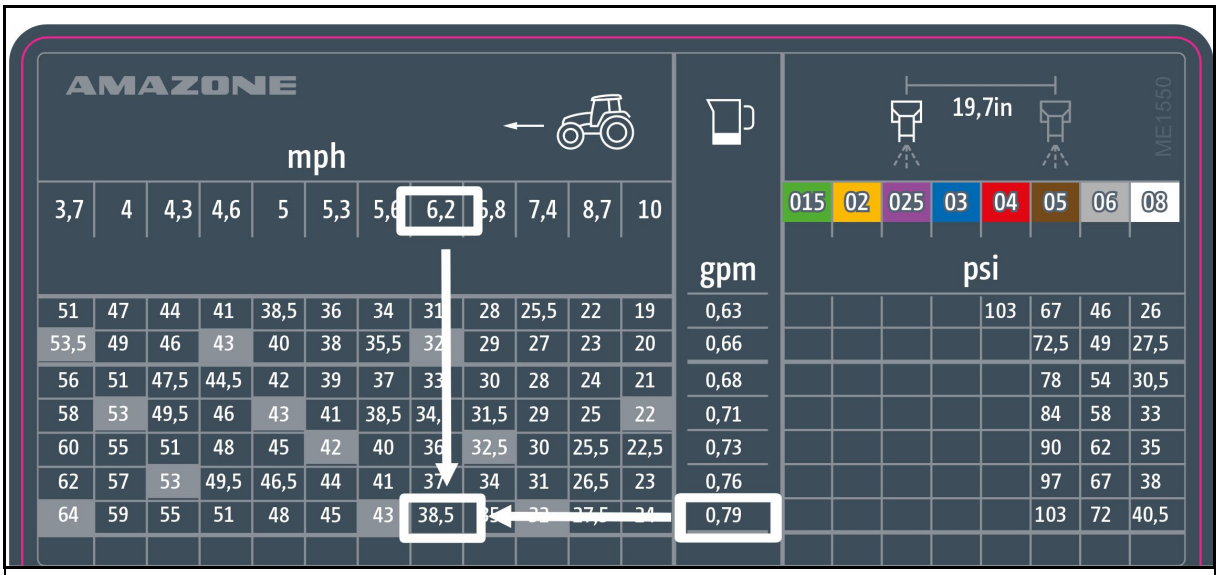

→ **Permissible application rate per acre / hectare = 38,5 gal/ac (372 l/ha)**

4.13 Technical Data

4.13.1 Basic machine

Type	UF 1002	UF 1302	UF 1602	UF 2002
Spray liquid tank				
Actual volume	291 gal 1100 l	370 gal 1400 l	444 gal 1680 l	561 gal 2125 l
Nominal volume	264 gal 1000 l	343 gal 1300 l	423 gal 1600 l	528 gal 2000 l
Flushing water tank	42 or 67 gal 160 l or 260 l	42 or 67 gal 160 l or 260 l	53 or 92 gal 200 l or 350 l	53 or 92 gal 200 l or 350 l
Permissible system pressure	145 psi 10 bar			
Overall length*	31,5 in 800 mm		39 in 1000 mm	
Distance from centre of gravity **d**	0,03 in 0.85 mm			
	Category 2		Category 3, 3N	
Three-point connec-tion	Quick-coupling system with Category 3 top link pin			
Spray pressure ad-justment	Electric			
Spray pressure set-ting range	12 – 145 psi 0.8-10 bar			
Spray pressure dis-play	digital spray pressure display			
Pressure filter	50 (80.100) mesh			
Agitator	Infinitely variable			

*** Measurement from the lower link connection**

Super-S1- sprayer boom

Working width [m]	**49 ft**	**59 ft**	**69/49 ft**
	15 m	**18 m**	**21/15 m**
Transport width	94 in 2400 mm		
Overall length	35 in 900 mm		
Height when machine is parke	130 in 3300 mm		
Nozzle height	20 - 83 in 500 - 2100 mm		20 - 87 in 500 - 2200 mm

Super-S2- sprayer boom

Working width [ft]	49	52	59	66	69	79	89/69/49	89/69/49	92	98
Transport width	94 in									
Overall length	35 in						39 in			
Height when machine is parke	114 in							117 in	114 in	117 in
Nozzle height	20-83 in				20 - 87 in					

Working width [m]	15	16	18	20	21	24	27/23/18	27/21/15	28	30
Transport width	2400 mm									
Overall length	900 mm						1000 mm			
Height when machine is parke	2900 mm							2980 mm	2900 mm	2980 mm
Nozzle height	500 mm - 2100 mm				500 mm - 2200 mm					

Q-Plus sprayer boom

Working width	39 ft 12 m	41 ft 12.5 m	49 ft 15 m
Transport width	100 in 2560 mm	100 in 2560 mm	118 in 2998 mm
Overall length	33 in 850 mm		
Height of the parked implement	97 in 2460 mm		
Nozzle height from / to	20 - 83 in 500 - 2100 mm		

4.13.1 Spraying technology

Part-width sections depending on the working width

Super-S1-sprayer boom

Working width		Number	Number of spraying nozzles width sections
49 ft	15 m	5	7-5-6-5-7
		7	3-4-5-6-5-4-3
59/49 ft	18/15 m	5	6-8-8-8-6
		7	5-5-5-6-5-5-5
		9	3-3-4-5-6-5-4-3-3
69/49 ft	21/15 m	7	6-6-6-6-6-6-6
		9	2-4-6-6-6-6-6-4-2
69/49 ft / DUS	21/15 m / DUS	5	9-8-8-8-9
		7	6-6-6-6-6-6-6
		9	2-4-6-6-6-6-6-4-2

Super-S2-sprayer boom

Working width		Number	Number of spraying nozzles width sections
49 ft	15 m	5	6-6-6-6-6
		7	3-5-5-4-5-5-3
52 ft	16 m	5	7-6-6-6-7
59 ft	18 m	5	6-8-8-8-6
		7	5-6-5-4-5-6-5
		9	2-3-6-5-4-5-6-3-2
66 ft	20 m	5	8-8-8-8-8
		7	5-5-6-8-6-5-5
		9	3-4-6-5-4-5-6-4-3
69 ft	21 m	5	9-8-8-8-9
		7	6-6-6-6-6-6-6
		9	4-4-6-5-4-5-6-4-4
		11	4-4-3-3-5-4-5-3-3-4-4
69/49 ft	21/15 m	7	6-6-6-6-6-6-6
		9	6-4-4-5-4-5-4-4-6
		11	3-3-4-4-5-4-5-4-4-3-3
79 ft	24 m	5	9-10-10-10-9
		7	6-6-8-8-8-6-6
		9	6-5-6-5-4-5-6-5-6
		11	4-4-5-4-5-4-5-4-5-4-4
89 ft 89/69/49 ft	27 m 27/21/15 m	**7**	9-6-8-8-8-6-9
		9	6-6-6-6-6-6-6-6-6
		11	6-6-4-4-5-4-5-4-4-6-6
92 ft	28 m	**7**	8-8-8-8-8-8-8
		9	7-6-6-6-6-6-6-6-7
		11	5-5-5-6-5-4-5-6-5-5-5
98 ft	30 m	**7**	8-9-8-10-8-9-8
		9	6-6-7-7-8-7-7-6-6
		11	6-6-5-6-5-4-5-6-5-6-6

Q-plus-sprayer boom

Working width		Number	Number of spraying nozzles width sections
39 ft	12 m	**5**	5-4-6-4-5
41 ft	12,5 m	**5**	5-5-5-5-5
49 ft	15 m	**5**	6-6-6-6-6
		7	2-4-6-6-6-4-2

Technical data: pump equipment

	Flushing water	Spraying / agitating				
Pump type	EX 6500-C		BPS160	BPS200	BPS260	BPS300
Delivery capacity at 540 rpm	1060 rpm 55 l/min	**0 bar**	43 gpm 162 l/min	53 gpm 199 l/min	66 gpm 249 l/min	79 gpm 299 l/min
		10 bar	41 gpm 156 l/min	52,5 gpm 199 l/min	65,7 gpm 249 l/min	78,7 gpm 298 l/min
Power requirement	0,4 hp 0,3 kW		7,8 hp 3,6 kW	5,6 hp 4,2 kW	7,1 hp 5,3 kW	8,4 hp 6,3 kW
Design	Roller pump	Piston diaphragm pump				
Pulsation damping	---	Oil damping			---	
Maximum permitted pump speed	1060 rpm (min^{-1})	540 rpm (min^{-1})				

4.13.2 Technical Residue

Suction chest technical residue

On the flat		2,1 gal / 8 l
Along the contours		
	Direction of travel 20 % to left	2,6 gal / 10 l
	Direction of travel 20 % to right	2,9 gal / 11 l
Along the gradient**		
	20 % up the slope	2,4 gal / 9 l
	20 % down the slope	2,4 gal / 9 l
Pump		1,6 gal / 6 l

Technical residue boom

Working width	Number of part-width sections	Part-width section control						Single nozzle control		
		Without DUS			With DUS			With DUS pro		
		A	B	C	A	B	C	A	B	C
49 ft	5	1,2 gal	1,9 gal	3,0 gal	3,3 gal	0,3 gal	3,6 gal			
		4,5 l	7,0 l	11,5 l	12,5 l	1,0l	13,5 l	4,1 gal	0,3 gal	4,1 gal
15 m	7	1,2 gal	2,0 gal	3,2 gal	3,4 gal	0,3 gal	3,7 gal	14,5 l	1,0 l	15,5 l
		4,5 l	7,5 l	12,0 l	13,0l	1,0 l	14,0l			
52 ft	5	1,2 gal	2,0 gal	3,2 gal	3,4 gal	0,3 gal	3,7 gal	3,9 gal	0,3 gal	4,2 gal
16 m		4,5 l	7,5 l	12,0 l	13,0 l	1,0 l	14,0 l	14,8 l	1,0 l	15,8 l
59 ft	5	1,2 gal	2,1 gal	3,3 gal	3,6 gal	0,3 gal	3,8 gal			
		4,5 l	8,0 l	12,5 l	13,5 l	1,0 l	14,5 l	4,1 gal	0,3 gal	4,4 gal
18 m	7	1,2 gal	2,2 gal	3,4 gal	3,7 gal	0,3 gal	4,0 gal	15,7 l	1,0 l	16,7 l
		4,5 l	8,5 l	13,0 l	14,0l	1,0l	15,0l			
66 ft	5	1,2 gal	2,2 gal	3,4 gal	3,7 gal	0,3 gal	4,1 gal			
		4,5 l	8,5 l	13,0 l	14,0 l	1,0 l	15,5	4,8 gal	0,3 gal	5,0 gal
20 m	7	1,2 gal	2,5 gal	3,7 gal	4,0 gal	0,3 gal	4,2 gal	18,1 l	1,0 l	19,1
		4.5 l	9.5 l	14.0 l	15.0 l	1.0 l	16.0l			
69 ft	5	1,2 gal	2,4 gal	3,6 gal	3,7 gal	0,4 gal	4,2 gal			
		4,5 l	9,0 l	13,5 l	14,0 l	1,5 l	16,0 l			
	7	1,2 gal	2,6 gal	4,0 gal	4,2 gal	0,4 gal	4,6 gal			
		5,0 l	10,0 l	15,0 l	16,0 l	1,5 l	17,5 l	4,8 gal	0,4 gal	5,2 gal
21 m	9	1,2 gal	2,9 gal	4,2 gal	4,5 gal	0,4 gal	4,9 gal	18 l	1,5 l	19,5 l
		5,0 l	11,0 l	16,0 l	17,0 l	1,5 l	18,5 l			
	11	1,5 gal	4,1 gal	5,5 gal	4,6 gal	0,4 gal	5,0 gal			
		5.5 l	15.5 l	21.0 l	17.5 l	1,5 l	19.0 l			
69/49 ft	7	1,2 gal	2,6 gal	4,0 gal	4,2 gal	0,4 gal	4,6 gal			
		5,0l	10,0 l	15,0 l	16,0 l	1,5 l	17.5 l			
	9	1,2 gal	2,9 gal	4,2 gal	4,5 gal	0,4 gal	4,9 gal	5,0 gal	0,4 gal	5,4 gal
21/15 m		5,0 l	11,0 l	16,0 l	17,0 l	1,5 l	18,5 l	18,8 l	1,5 l	20,3l
	11	1,5 gal	4,1 gal	5,5 gal	4,6 gal	0,4 gal	5,0 gal			
		5.5 l	15.5 l	21.0 l	17.5 l	1,5 l	19.0 l			
49 ft	5	1,2 gal	2,6 gal	4,0 gal	4,2 gal	0,4 gal	4,6 gal			
		5,0 l	10,0 l	15,0 l	16,0 l	1,5 l	17.5 l			
	7	1,2 gal	3,0 gal	4,3 gal	4,6 gal	0,4 gal	5,0 gal			
		5,0 l	11,5l	16,5 l	17.5 l	1,5 l	19.0 l	5,4 gal	0,4 gal	5,8 gal
24 m	9	1,2 gal	3,1 gal	4,5 gal	4,6 gal	0,4 gal	5,2 gal	20,6 l	1,5 l	22,1l
		5,0 l	12,0l	17,0 l	18,0 l	1,5 l	19,5l			
	11	1,5 gal	4,3 gal	5,8 gal	6,2 gal	0,4 gal	6,6 gal			
		5.5 l	16,5 l	22.0 l	23.5 l	1,5 l	25.0 l			

89 ft **27 m**	7	1,2 gal	3,3 gal	4,6 gal	4,9 gal	0,5 gal	5,4 gal	5,9 gal	0,5 gal	6,4 gal
		5,0 l	12,5 l	17,5 l	18,5 l	2,0 l	20,5 l	22,2 l	2,0 l	24,2 l
	9	1,5 gal	4,6 gal	6,1 gal	6,3 gal	0,5 gal	6,9 gal			
		5.5 l	17,5 l	23,0 l	24,0 l	2,0 l	26,0 l			
	11	1,5 gal	5,7 gal	7,1 gal	7,4 gal	0,5 gal	8,0 gal			
		5.5 l	21.5 l	27.0 l	28.0 l	2.0 l	30.0 l			
92 ft **28 m**	7	1,2 gal	3,4 gal	4,8 gal	5,0 gal	0,5 gal	5,5 gal	5,9 gal	0,5 gal	6,5 gal
		5,0 l	13,0 l	18,0 l	19,0 l	2,0 l	21,0 l	22,4 l	2,0 l	24,4 l
	9	1,5 gal	4,6 gal	6,0 gal	6,3 gal	0,5 gal	6,9 gal			
		5.5 l	17,5 l	23,0 l	24,0l	2,0 l	26,0l			
	11	1,5 gal	6,0 gal	7,4 gal	7,7 gal	0,5 gal	8,2 gal			
		5.5 l	22.5l	28.0 l	29.0 l	2.0 l	31.0 l			
98 ft **30 m**	7	1,2 gal	3,6 gal	4,9 gal	5,2 gal	0,7 gal	5,8 gal	7,0 gal	0,7 gal	7,6 gal
		5,0 l	13,5l	18,5 l	19,5 l	2,5 l	22,0 l	26,4 l	2,5 l	28,9 l
	9	1,2 gal	4,8 gal	6,2 gal	6,5 gal	0,7 gal	7,1 gal			
		5,0 l	18,0 l	23,5 l	24,5 l	2,5 l	27,0 l			
	11	1,2 gal	6,1 gal	7,5 gal	7,8 gal	0,7 gal	8,5 gal			
		5,0 l	23,0 l	28,5 l	29,5 l	2,5 l	32,0 l			

DUS: Pressure circulating system
A: Dilutable
B: Not dilutable
C: Total

4.13.3 Payload

Maximum payload	**=**	**Permissible technical implement weight**	**-**	**Tare weight**

DANGER

Exceeding the maximum permissible payload is prohibited.

Risk of accident due to unstable driving conditions!

Carefully determine the payload, and therefore the permitted filling amount for your machine. Not all filling media can be used to fill the tank completely.

The permissible technical implement weight and the tare weight are specified on the implement rating plate.

4.14 Required tractor equipment

To be used with the machine, the tractor must fulfil the performance requirements and be equipped with the required electrical, hydraulic and brake connections for the brake system.

Tractor engine power

UF 1002	from 74 hp / 55 kW (75 bhp) upwards
UF 1302	from 9 hp / 66 kW (90 bhp) upwards
UF 1602	from 120 hp / 90 kW (125 bhp) upwards
UF 2002	from 148 hp / 110 kW (150 bhp) upwards

Electrical system

Battery voltage:	• 12 V (volts)
Lighting socket:	• 7 pin

Hydraulic system

Maximum operating pressure:	• 210 bar
Tractor pump capacity:	• Boom folding: 6,6 gpm (25 l/min)
	• Hydraulic spray pump drive: 13 gpm (50 l/min)
	• ContourControl 2,6 gpm (10 l/min)
Implement hydraulic fluid:	• HLP68 DIN 51524 The implement hydraulic fluid is suitable for the combined hydraulic fluid circuits of all standard tractor brands.
Control units:	• Depending on equipment, see page 73

Universal joint shaft

Required speed:	• 540 rpm
Direction of rotation:	• Clockwise, viewed from rear toward the tractor.

Three-point attachment

- The tractor's lower links must have lower link hooks.
- The tractor's upper links must have upper link hooks.

4.15 Noise emissions data

The workplace-related emissions value (acoustic pressure level) is 74 dB(A), measured during operation at the ear of the tractor driver with the cab closed.

Measuring unit: OPTAC SLM 5.

The noise level is primarily dependent on the vehicle used.

5 Construction and function of the basic machine

5.1 Function

Through the suction valve chest and the suction filter (2), the spraying pump (1) draws

- spray liquid from the spray liquid tank.
- fresh water via the external suction port (3).
- flushing water from the flushing water tank.

Thus, the drawn liquid is conveyed to

- the part-width section valves (5) via the pressure filter (4). The part-width section valves take over the distribution to the spray lines.
  Alternatively:

  through the pressure filter (4) to the single nozzle control (10).
- to the injector (6) and the induction bowl (7).
  To prepare the spray liquid, pour the required quantity of agent into the induction bowl and draw into the spray liquid tank.
- directly in the spray liquid tank.
- to the internal (8) or external cleaning switch tap (9).

The agitator ensures homogeneous spray liquid in the spray liquid tank.

Single nozzle control

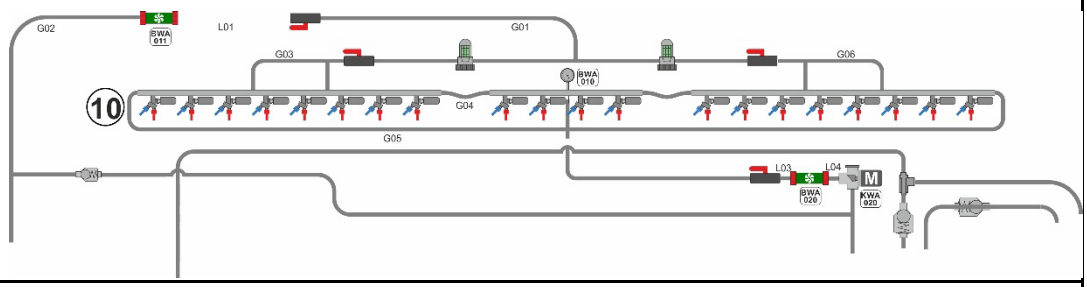

Part-width section control

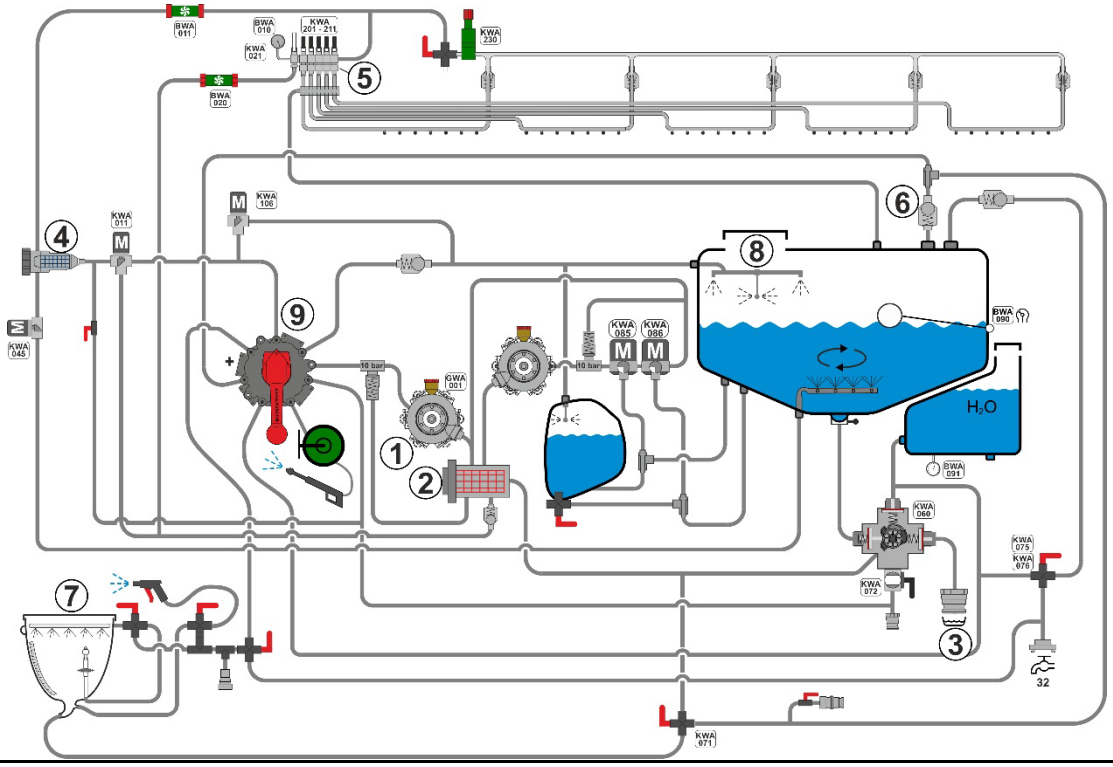

5.2 Control panel

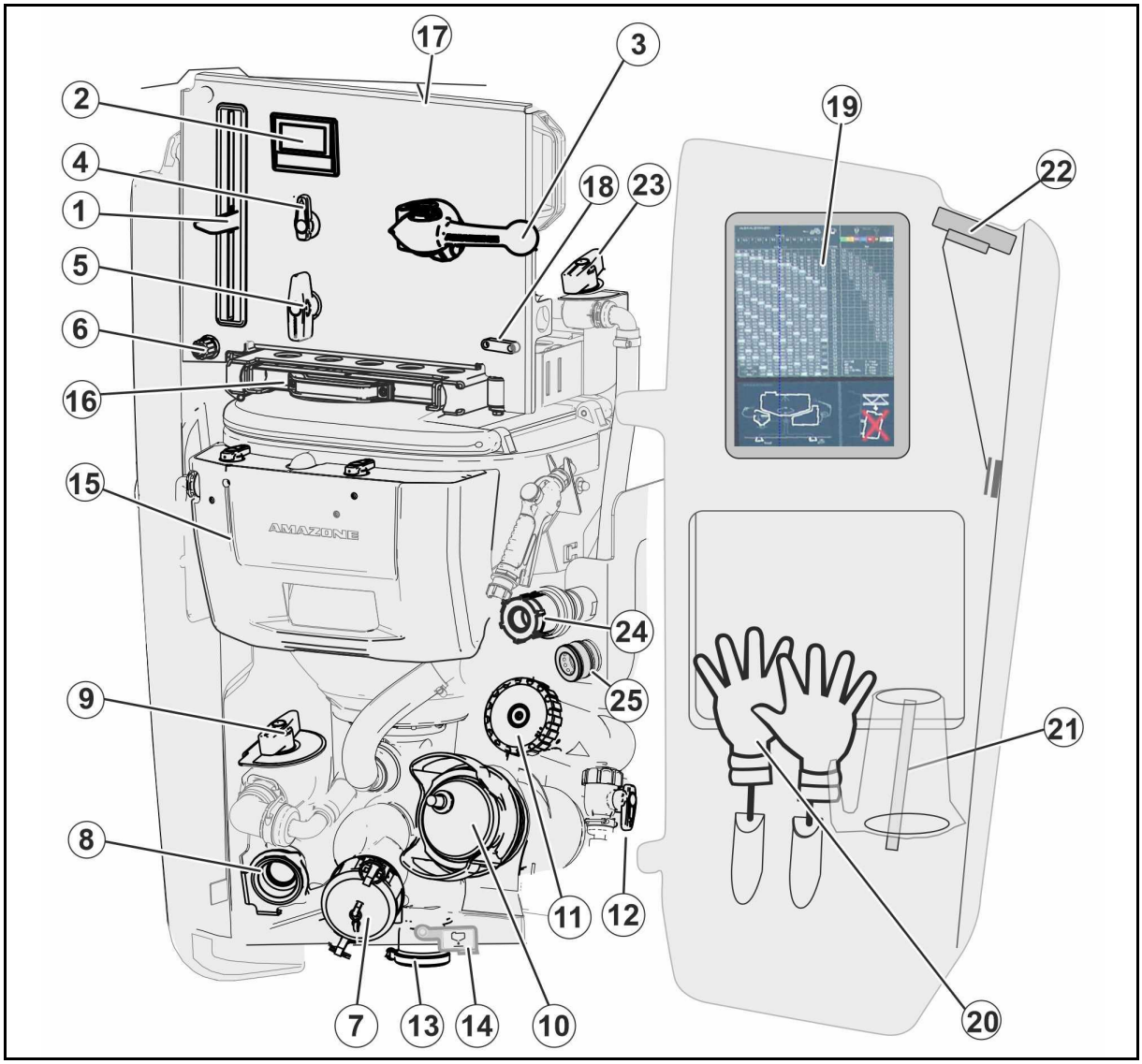

(1) Suction side control via TwinTerminal

(2) TwinTerminal

(3) Pressure side control **(DA)**

(4) Switch tap source for induction bowl **(QU)**

(5) Injector switch tap **(IJ)**

(6) Hand wash water stop tap

(7) Filling connection (suction)

(8) Filling connection (pressure) for spray liquid tank (optional), flushing water tank

(9) Pressure filling switch tap **(FD)**

(10) Suction filter

(11) Pressure filter

(12) Pressure filter drain stop tap **(DE)**

(13) Drain for residual quantity from the spray liquid tank, pressure filter and quick emptying

(14) Stop tap for residual quantity **(EW)**

(15) Induction bowl

(16) Ascent

(17) Lighting

(18) Spirit level

(19) Spray table

(20) Holder for protective gloves

(21) Holder for measuring cup

(22) Cover hood opener

(23) Suction from container switch tap (CTS)

(24) CTS connection

(25) CTS flushing connection

Switch tap on the control terminal

Pressure valve chest switch tap (DA)

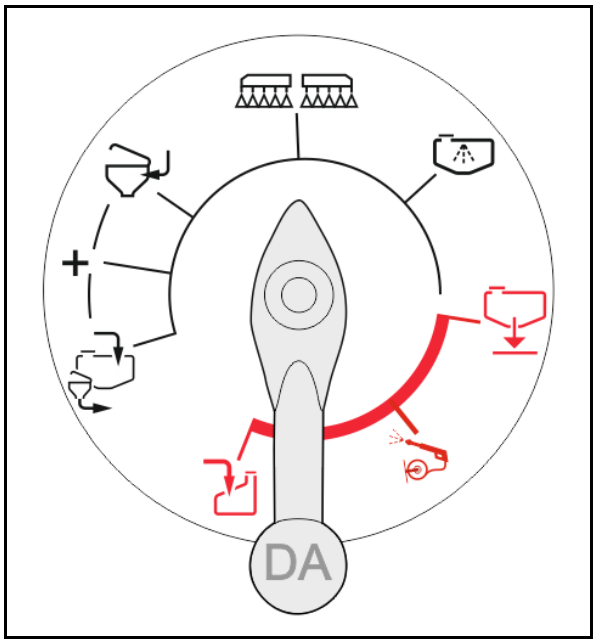

- Fill spray liquid tank via suction connection / suction from the induction bowl
- Supply induction bowl
- + (+) Switch the functions simultaneously.
- Sprayers
- Internal cleaning

Pay particular attention to the corresponding sections of the operating manual when using the functions marked in red!

- Quick emptying
- External cleaning
- Filling the flushing water tank

Operation of the pressure valve chest:

- Activate the liquid circulation on the pressure side
→ The spray liquid can flow.

- Switch tap is locked.
→ Hand lever cannot be turned, function selection not possible.

- Liquid circulation blocked on the pressure side.
→ The spray liquid cannot flow.

- Switch tap unlocked.
→ Hand lever can be turned, function selection possible.

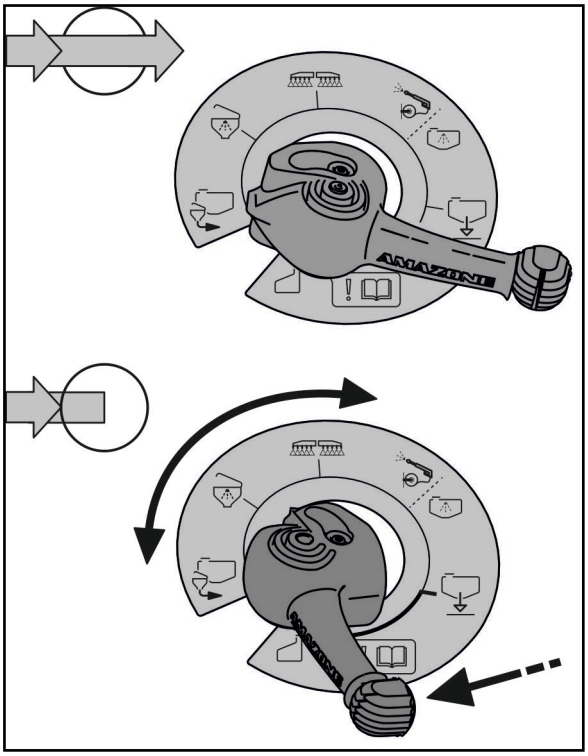

Suction valve chest display (SA)

- Suction via suction hose
- Suction from spray liquid tank
- Suction from flushing water tank

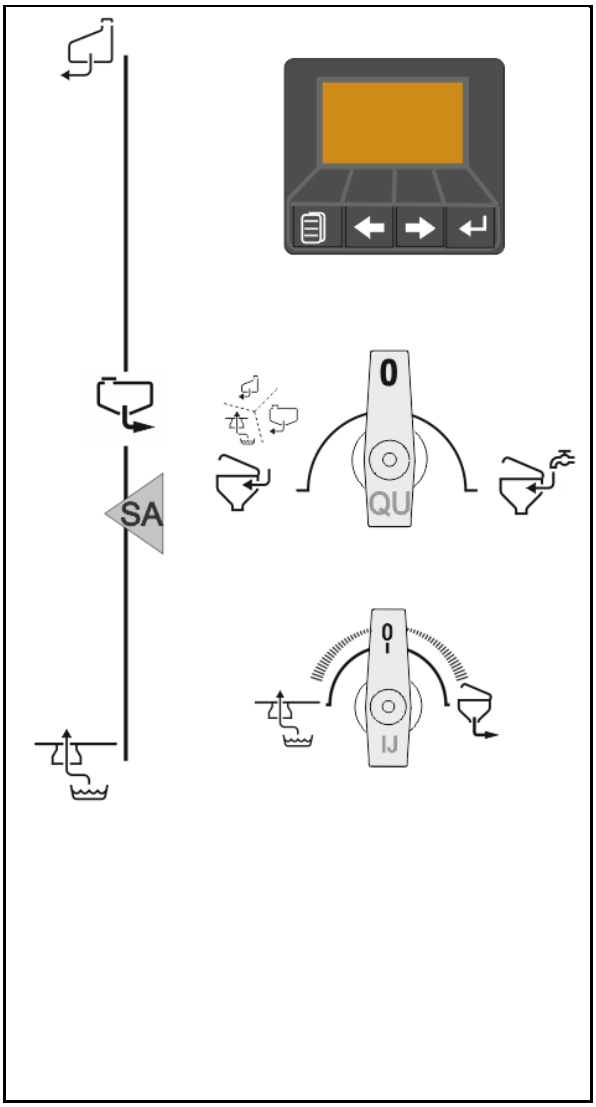

TwinTerminal

The suction valve chest is electrically switched via the TwinTerminal

Switch tap source for induction bowl (QU)

- Use liquid from the suction valve chest for the induction bowl
- Use filling water from the pressure connection for the induction bowl

Switch tap injector (IJ)

- Suction from induction bowl
- Increase filling capacity using injector

Pressure filter switch tap (DE)

- Drain pressure filter

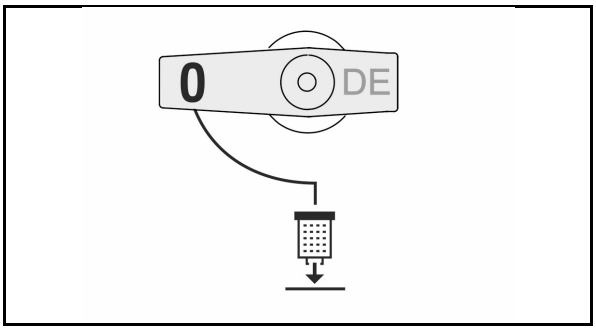

Suction from container switch tap (GA)

- 100% maximum suction capacity

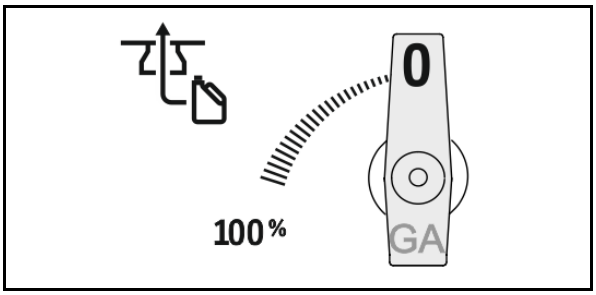

- **Pressure filling switch tap (FD)**
  - o Filling the spray liquid tank
  - o Filling the flushing water tank

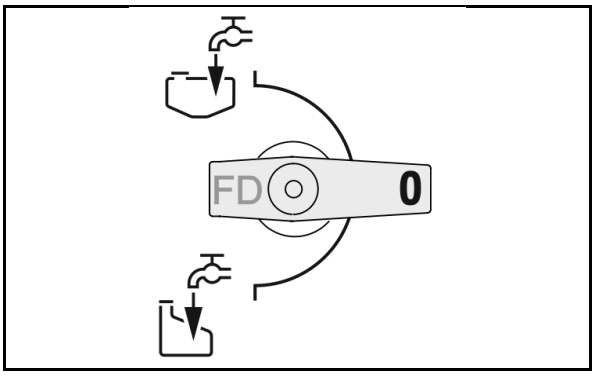

- **Empty spray liquid tank stop tap**

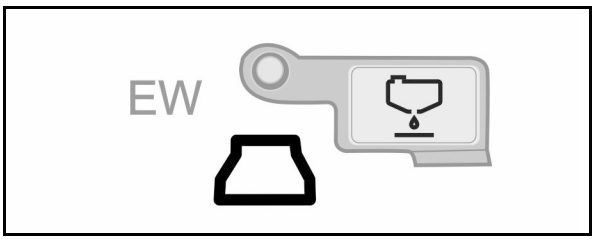

5.2.1 Induction bowl with injector and canister flushing

(1) Swivelling induction bowl for pouring, dissolving and drawing in crop protection agents and urea.
Holding capacity of approx. 60 l

(2) Locking mechanism for folding cover

(3) Canister flushing push button

(4) The open folding cover can be used as a shelf

(5) Switch tap EA

(6) Handle to swivel the induction bowl into working or transport position

(7) Switch tap EB

(8) Spray pistol for cleaning the control panel

(9) Scale to show the contents

(10) Cleaning nozzle for canisters with pressure plate

(11) Induction bowl cleaning nozzle

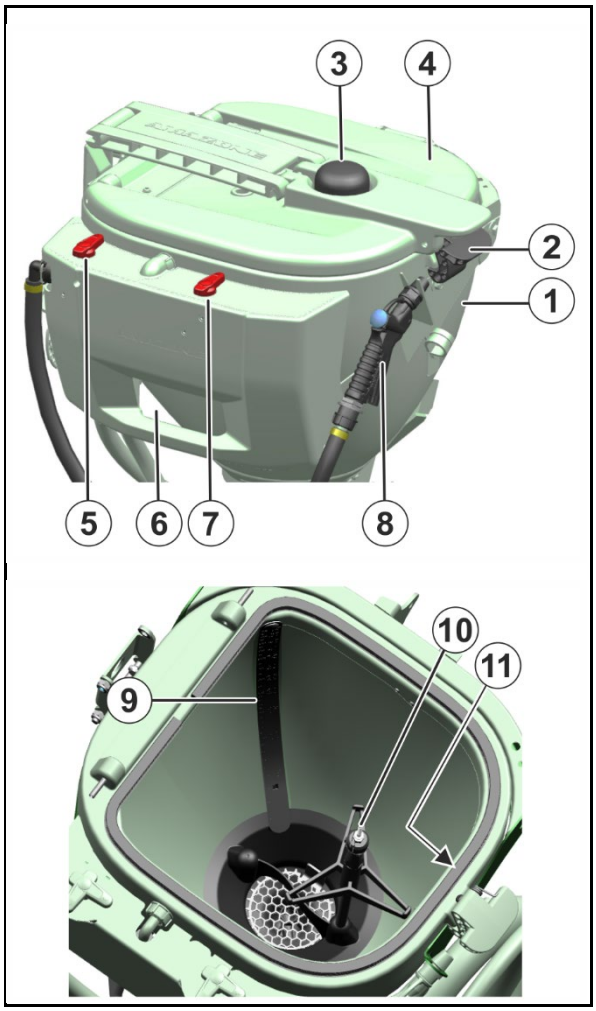

Water escapes from the canister flushing nozzle if

- the pressure plate is pressed down by the canister.
- the closed folding cover is pressed downwards.

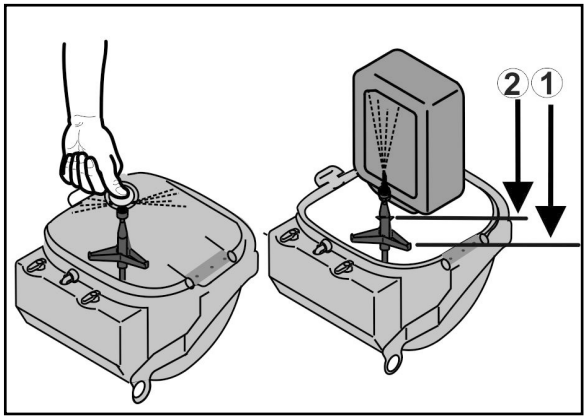

5.2.2 Switch taps on the induction bowl

- **Switch tap (EA)**
  - o External cleaning of induction bowl
  - o Flush in agent with mixing nozzle

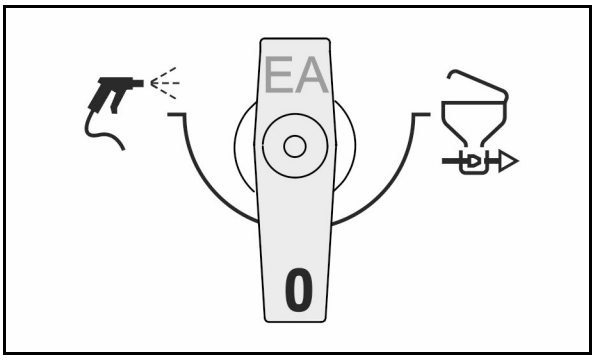

- **Switch tap (EB)**
  - o Clean canister / clean induction bowl
  - o Flushing via ring line

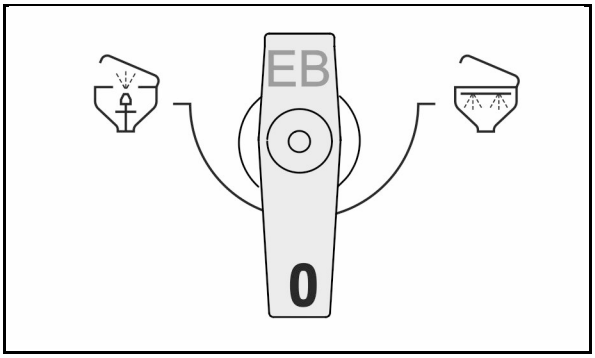

5.3 Parking supports

The implement is equipped with 2 telescopic parking supports.

The implement may only be parked in parking position on the two extended parking supports.

The parking support is moved into parking position or transport position by manually pulling on the rod.

- Parking supports in parking position

Hook the pulling rod on the lug (1) and pull to move the parking support into transport position.

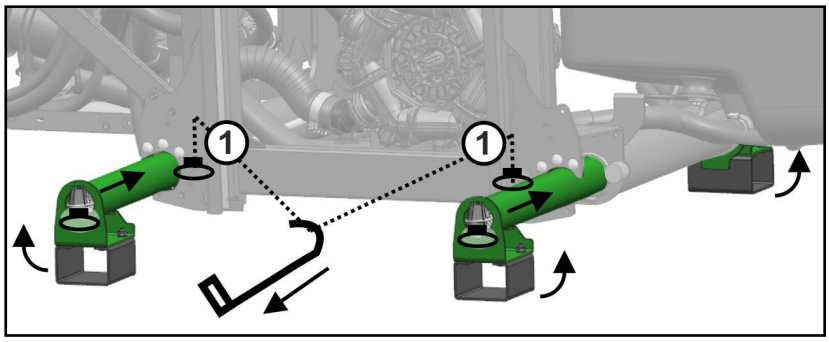

- Parking supports in transport position

Hook the pulling rod on the lug (2) and pull to move the parking support into parking position.

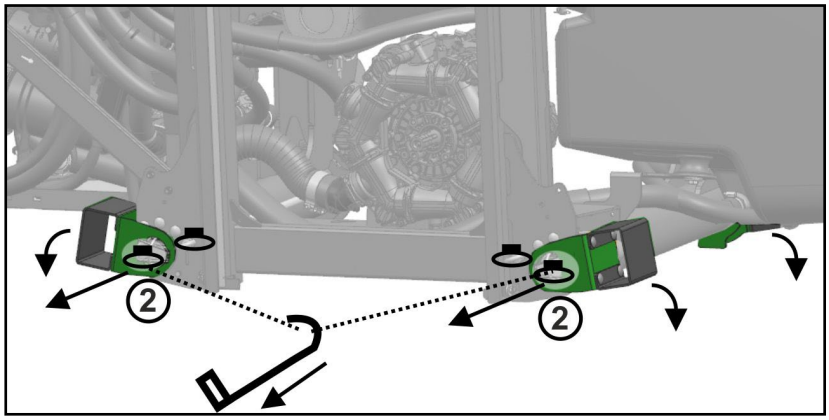

The parking position of the pulling rod is on the right of the control panel.

5.4 Three-point attachment frame

UF1602, UF2002

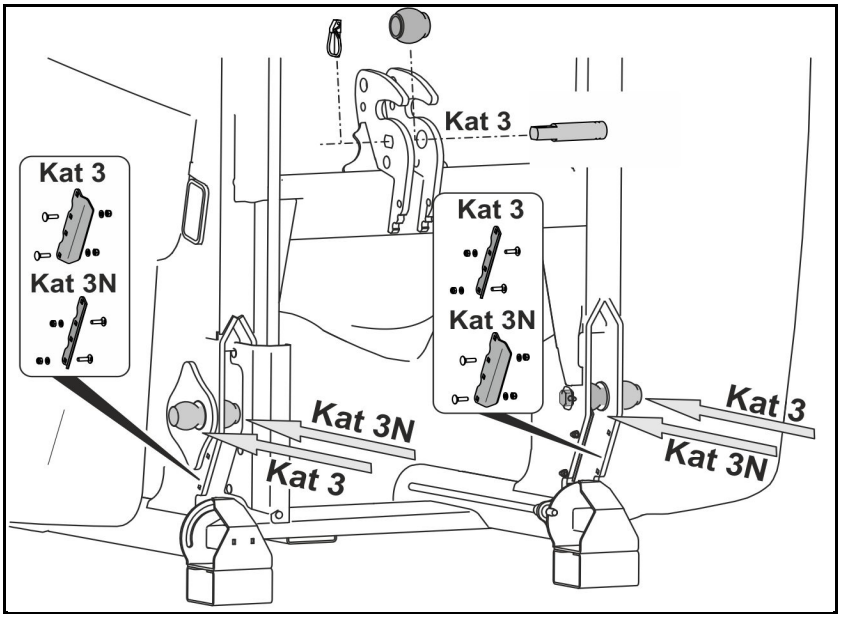

Choice of mounting category 3N or 3

- Equip Category 3 top link pin with Category 3 ball sleeve
- Category 3N: Couple the Category 3 lower link ball on the inside.
- Category 3: Couple the Category 3 lower link ball on the outside.
- Bolt on deflector guides for the tractor lower links according to the selected mounting category.

UF1002, UF1302

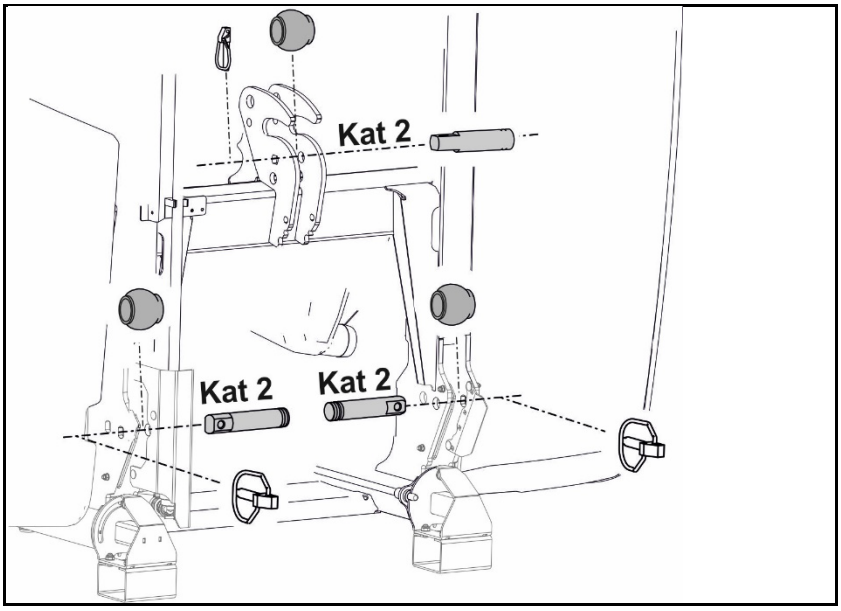

Cat 2 mounting category

Equip Cat 2 lower link pins and top link pins with Cat 2 ball sleeve.

5.5 Quick-coupling system

The quick-coupling system serves to facilitate mounting the field sprayer on the tractor.

The top link is coupled to the quick-coupling system and locked.

(1) Top link is secured to the front with the latch. The secured position is shown with the arrow

(2) Top link is secured to the rear with the safety latch.
The safety latch secures the top link to the rear as soon as the parking supports are put in transport position.

(3) Additional securing to the rear with hand lever

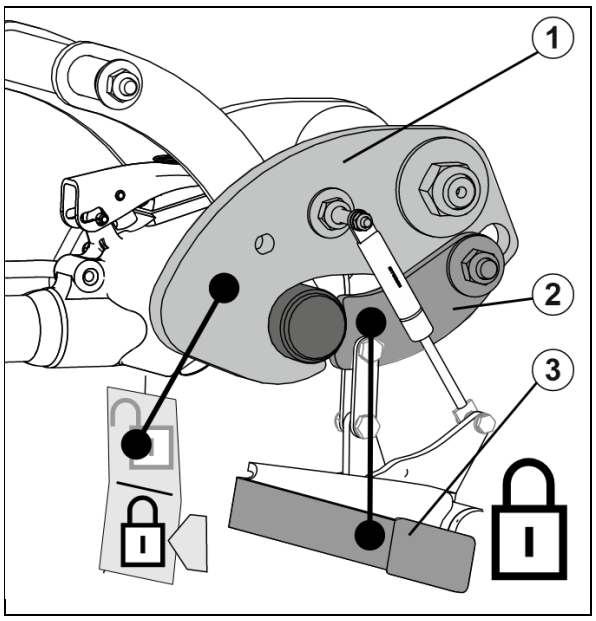

Quick-coupling system ready for coupling.

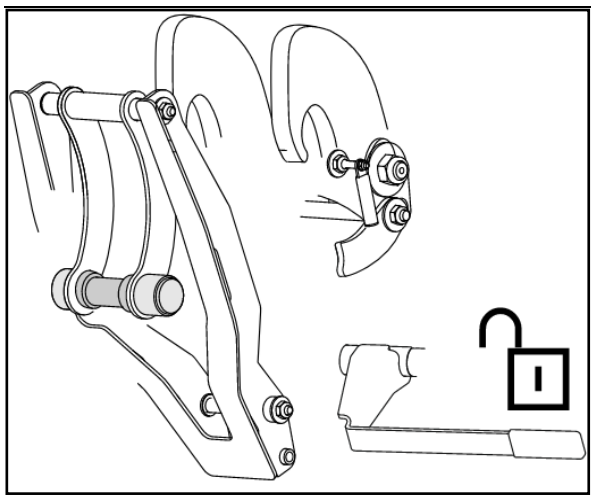

5.6 PTO shaft

The PTO shaft transmits power between the tractor and machine.

- PTO shaft

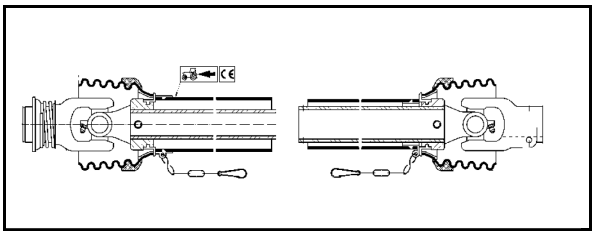

- Telespace PTO shaft (telescoping)

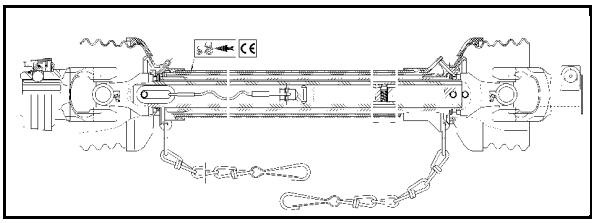

WARNING

Risk of crushing from the tractor and machine unintentionally starting up or rolling.

Only couple or uncouple the PTO shaft and tractor when the tractor and machine have been secured against both unintentional starting and unintentional rolling.

WARNING

Risk of being caught and drawn in by the unguarded PTO shaft or due to damaged safety devices.

- Never use the PTO shaft if the safety device is missing or damaged, or without correctly using the supporting chain.
- Before each use, check that
  - all PTO shaft protective devices are installed and fully functional.
  - the clearance around the PTO shaft is sufficient in all operating positions. Insufficient clearance will result in damage to the PTO shaft.
- Attach the supporting chains in a way that ensures a sufficient swivel range of the PTO shaft in all operating positions. Supporting chains must not become caught on machine or tractor parts.
- Have any damaged or missing parts of the PTO shaft replaced immediately with genuine parts from the PTO shaft manufacturer.
  Note that only a specialist workshop may repair a PTO shaft.
- With the machine uncoupled, place the PTO shaft in the holder provided. This protects the PTO shaft from damage and dirt.
  - Never use the supporting chain of the PTO shaft to suspend the uncoupled PTO shaft.

WARNING

Risk of being caught and drawn in by unguarded PTO shaft parts in the power transmission area between the tractor and driven machine.

Work only when the drive between the tractor and driven machine is fully guarded.

- The unguarded parts of the PTO shaft must always be guarded by a shield on the tractor and a PTO shaft guard on the machine.
- Check that the shield on the tractor or the PTO shaft guard on the machine and the safety devices and guards of the extended PTO shaft overlap by at least 50 mm. If they do not, you must not power the machine via the PTO shaft.

- Use only the PTO shaft provided or one of the same type.
- Read and follow the operating manual provided for the PTO shaft. Correct use and maintenance of the PTO shaft prevents serious accidents.
- When coupling the PTO shaft
  - refer to the operating manual provided for the PTO shaft.
  - observe the permissible drive speed of the machine.
  - observe the correct installation length of the PTO shaft. Refer to the section "Adjusting the length of the PTO shaft to the tractor", page **128**.
  - observe the correct installation position of the PTO shaft. The tractor symbol on the protective tube of the PTO shaft identifies the tractor-side connection of the PTO shaft.
- Always mount the overload or freewheel clutch on the machine if the PTO shaft has an overload or freewheel clutch.
- Before switching on the universal joint shaft, read and follow the safety precautions for universal joint shaft operation in the section "Safety information for the user", page 33.

5.6.1 Coupling the PTO shaft

WARNING

Risk of crushing or impact if there is insufficient clearance when coupling the PTO shaft.

Couple the PTO shaft with the tractor before coupling the machine with the tractor. This will ensure the necessary clearance for safe coupling of the PTO shaft.

1. Drive the tractor up to the machine, leaving a clearance (approx. 10 in / 25 cm) between the tractor and the machine.
2. Secure the tractor against unintentional starting and rolling, see the section "Securing the tractor against unintentional starting and rolling", starting on page **125**.
3. Check whether the tractor universal joint shaft is switched off.
4. Clean and grease the tractor universal joint shaft.
5. Fit the latch of the PTO shaft over the universal joint shaft of the tractor until the latch is heard to engage. When coupling the PTO shaft, refer to the operating manual provided for the PTO shaft and observe the permissible universal joint shaft speed of the machine.
6. Secure the PTO shaft guard using the supporting chain(s) to prevent movement.
   - 6.1 Fasten the supporting chain(s) so that it as perpendicular to the PTO shaft as possible.
   - 6.2 Attach the supporting chain(s) in a way that ensures sufficient swivel range of the PTO shaft in all operating positions.

CAUTION

Supporting chains must not become caught on machine or tractor parts.

7. Check that there is sufficient clearance around the PTO shaft in all operating conditions. Insufficient clearance will result in damage to the PTO shaft.
8. Provide the necessary clearance (if required).

5.6.2 Uncoupling the PTO shaft

WARNING

Risk of crushing or impact if there is insufficient clearance when uncoupling the PTO shaft.

First uncouple the machine from the tractor before uncoupling the PTO shaft from the tractor. This will ensure the necessary clearance for safe uncoupling of the PTO shaft.

CAUTION

Risk of burning on hot components of the PTO shaft.

This danger can cause minor to serious injuries to the hands.

Do not touch components of the PTO shaft that have become hot (particularly clutches).

1. Uncouple the machine from the tractor. Refer to the section "Uncoupling the machine", page 129.
2. Drive the tractor up to the machine, leaving a clearance of approximately 10 in / 25 cm between the tractor and the machine.
3. Secure the tractor against unintentional starting and rolling, see the section "Securing the tractor against unintentional starting and rolling", starting on page 125.
4. Pull the latch of the PTO shaft off the universal joint shaft of the tractor. Observe the operating manual supplied with the PTO shaft when uncoupling the PTO shaft.
5. Place the PTO shaft in the holder provided.
6. Clean and lubricate the PTO shaft if it is not going to be used for a longer period of time.

5.7 Hydraulic connections

- All hydraulic hose lines are equipped with grips.

  Coloured markings with a code number or code letter have been applied to the gripping sections in order to assign the respective hydraulic function to the pressure line of a tractor control unit!

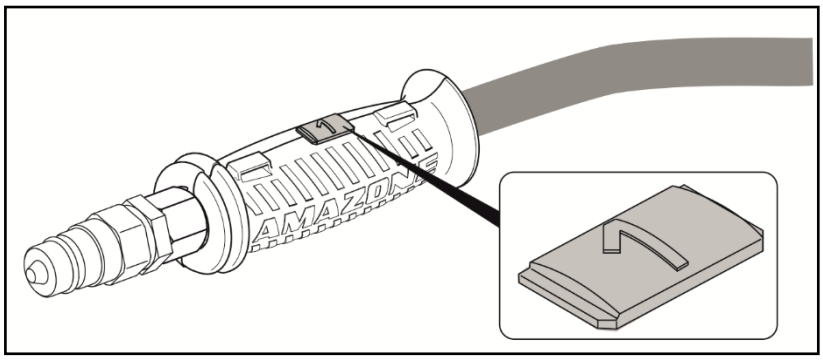

  Films are stuck on the implement for the markings that illustrate the respective hydraulic function.

- The tractor control unit must be used in different types of activation, depending on the hydraulic function.

Latched, for a permanent oil circulation	∞
Tentative, activate until the action is executed	
Float position, free oil flow in the control unit	

Marking		Function			Tractor control unit	
yellow	1		**height adjustment**	raise	Double acting	
	2			lower		
green	1		**boom folding**	fold out	Double acting	
	2			fold in		
beige	1		**tilt adjustment**	lift left-hand boom	Double acting	
	2			lift right-hand boom		

Profi- folding

Marking		Function	Tractor control unit	
red	P	Permanent oil circulation	Single-acting	∞
red	T	Pressure-free return flow		
red	LS	Load sensing control line		

WARNING

Risk of infection from hydraulic fluid escaping at high pressure.

When coupling and uncoupling the hydraulic hose lines, ensure that the hydraulic system is depressurised on both the machine and tractor sides.

If you are injured by hydraulic fluid, contact a doctor immediately.

Oil return flow

Profi-folding:

Maximum permissible pressure in oil return: 73 psi / 5 bar

Therefore do not connect the oil return to the tractor control unit, but to a pressure-free oil return flow with a large plug coupling.

WARNING

For the oil return, use only DN16 lines and select short return paths.

Pressurise the hydraulic system only when the free return has been correctly coupled.

Install the coupling union (supplied) on the pressure-free oil return flow.

Oil volume flow

Depending on the implement equipment (equipment a, b, c), the implement requires a specific oil volume flow that must be provided by the tractor.

Select the tractor such that it provides the required oil volume flow at operating point X on the field and also on the headlands with a moderate engine speed. You must also consider the tractor's own requirements.

An oil shortage impairs the functioning of the implement and can cause damage to the implement.

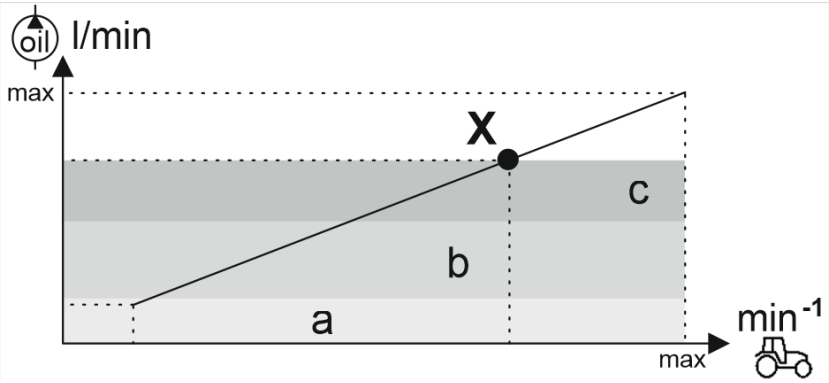

Load sensing operation

For load sensing operation, move the switch tap on the hydraulic block to the corresponding position.

5.7.1 Coupling the hydraulic hose lines

WARNING

Risk of crushing, cutting, catching, drawing in and impact from faulty hydraulic functions when the hydraulic hose lines are incorrectly connected.

When coupling the hydraulic hose lines, observe the coloured markings on the hydraulic plugs.

- Check the compatibility of the hydraulic fluids before connecting the machine to the tractor hydraulic system.

  Do not mix any mineral oils with biological oils.
- Observe the maximum permissible hydraulic fluid pressure of 210 bars.
- Only couple clean hydraulic connectors.
- Slide the hydraulic connector(s) into the hydraulic sockets until they are heard to engage.
- Check the coupling points of the hydraulic hose lines for correct, tight seating.

1. Swivel the actuation lever on the control valve on the tractor to float position (neutral position).
2. Clean the hydraulic plug for the hydraulic hose lines before connecting them to the tractor.
3. Connect the hydraulic hose line(s) to the tractor control unit(s).

5.7.2 Uncoupling the hydraulic hose lines

1. Swivel the actuation lever on the control unit on the tractor to float position (neutral position).
2. Unlock the hydraulic connectors from the hydraulic sockets.
3. Protect the hydraulic plug and hydraulic socket against soiling using the dust protection caps.
4. Place the hydraulic hose lines in the hose cabinet.

5.8 Control terminal / control computer

UF field sprayers with ISOBUS or AMASPRAY+ control terminal are equipped with a flow meter.

The application rate is set on the control terminal.

The control terminal controls a job computer. Here, the job computer receives all necessary information and manages the area-based regulation of the application rate [l/ha] depending on the quantity (target quantity) entered and the current operational speed [km/h].

5.8.1 Control terminal

The Control terminal can be used to:

- enter machine-specific data.
- enter job-related data.
- cause the field sprayer to change the spray rate used in spraying operation.
- operate all functions on the sprayer boom (Profi-folding only).
- operate special functions.
- monitor the field sprayer during spraying operation.

Once a job has been started, the Control terminal stores the data acquired.

See operating manual for software ISOBUS.

AmaTron 4

AmaPad 2

5.8.2 AMASPRAY+

The AMASPRAY+ can be used to:

- enter machine-specific data.
- cause the field sprayer to change the spray rate used in spraying operation.
- preselect hydraulic functions which are operated using the tractor control unit.
- operate special functions.
- monitor the field sprayer during spraying operation.
- switch part width sections on and off

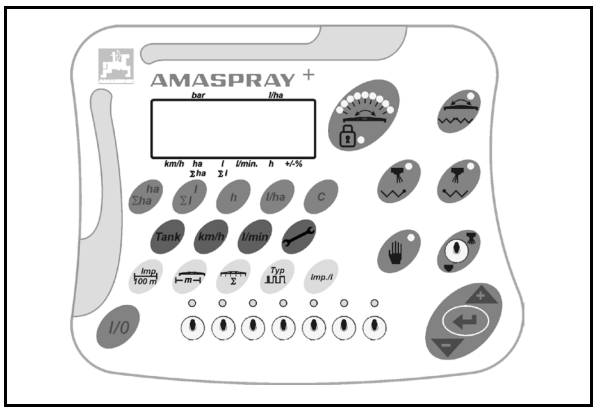

Current spread rate, speed, worked area, total area, quantity applied and overall spread rate, working time and distance travelled are continuously detected.

See also the AMASPRAY+ operating manual.

5.9 AmaPilot+ multi-function stick

The implement functions can be executed using the AmaPilot+.

AmaPilot+ is an AUX-N control element with freely selectable button assignment.

A default button assignment is pre-configured for every Amazone ISOBUS implement.

The functions are spread over 3 levels and can be selected by pressing with your thumb.

In addition to the standard level, two other control levels can be switched.

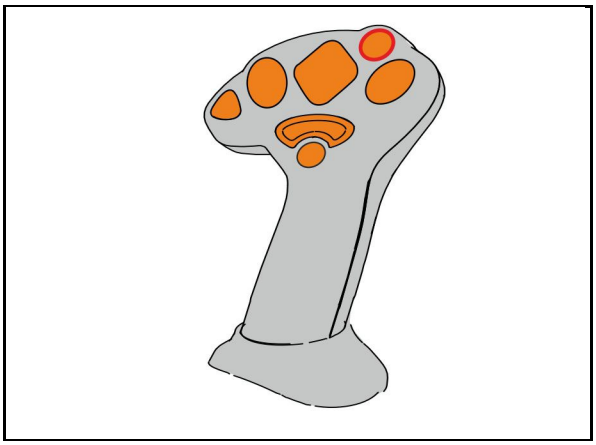

5.10 Spray liquid tank

(1) Spray liquid tank

The spray liquid tank is filled via

- the suction hose on the suction port,
- the pressure port

(2) Maintenance cover

(3) Fill level indicator

(4) Step-up handle

(5) Maintenance platform with ladder

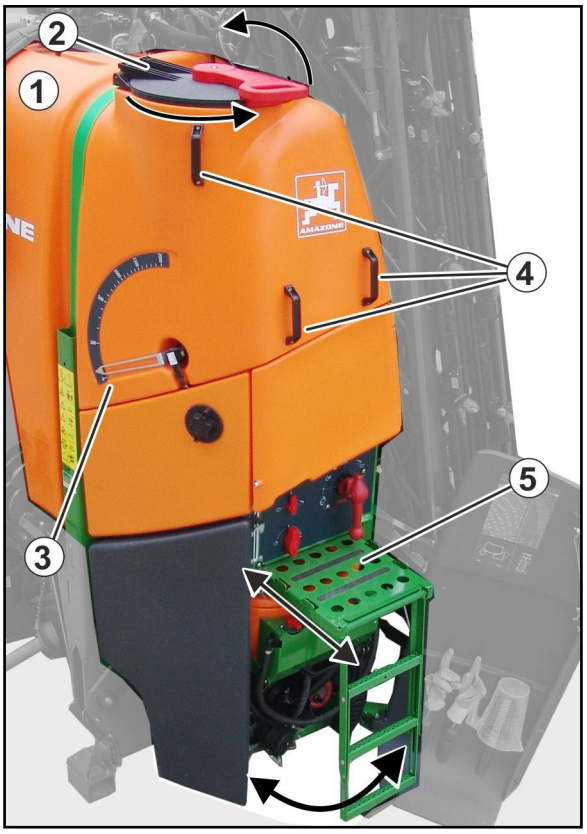

Maintenance cover• To open the lid, rotate to the left and swing open.

•To close the lid, fold down and rotate to the right until tight.

The maintenance cover is only used to check the spray liquid and is not suitable for filling the tank.

5.10.1 Maintenance platform with ladder

- To climb up, pull out the ladder with platform and fold down the ladder.
- If the ladder is no longer needed, swing it up and slide it under the control panel, along with the platform.

Make absolutely sure that the step is locked in its end position when slid away.

DANGER

- **Never climb into the spray liquid tank.**
- **Risk of injury from poisonous vapours.**
- **It is strictly forbidden to ride on the field sprayer.**
- **Riding on the machine creates a risk of falling.**

5.10.2 Suction port for filling the spray liquid tank (optional)

Observe the relevant instructions when filling the spray liquid tank from public water points using the suction hose.

(1) Suction hose.

(2) Quick coupling.

(3) Suction filter for filtering the intake water.

(4) Non-return valve. Prevents liquid already in the spray liquid tank from running out if the vacuum suddenly collapses during the filling process.

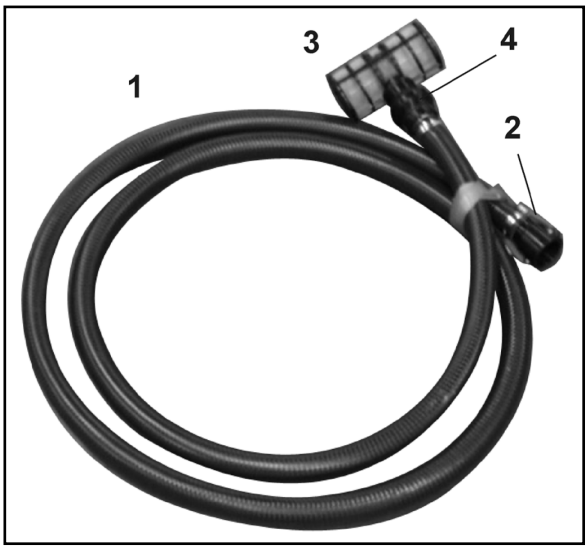

Suction hose holder on the Super-S boom

- When not in use, attach the suction hose in the holder.
- Clean the suction hose before use if it was contaminated with spray agent.

5.11 Spülwassertank

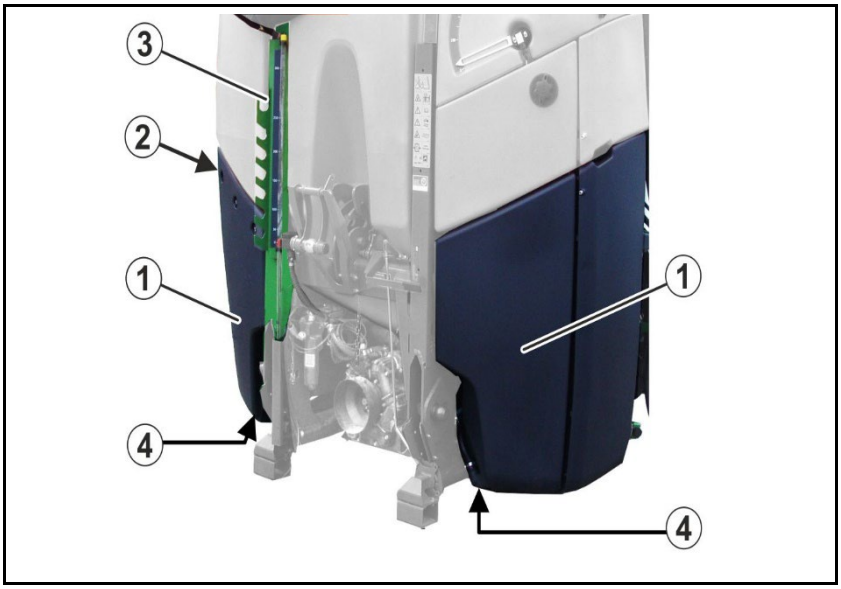

(1) Flushing water tank

(2) Filling opening

(3) Filling level indicator

(4) Draining

The flushing water tank introduces clear fresh water to the mixture. The water serves to

- thin the residue in the spray liquid tank at the end of spraying operation.
- clean (flush) the whole field sprayer in the field.
- clean the suction chest and the spray lines when the tank is full.

Screw lid with breather valve for the fill opening.

Füllen Sie nur klares Wasser in die Spülwassertank.

5.12 Hand wash facility

Hand wash facility (4,8 gal /18 l) with clear fresh water to clean hands or spraying nozzles.

(1) Hand wash tank

(2) Stop tap

(3) Soap dispenser

(4) Discharge

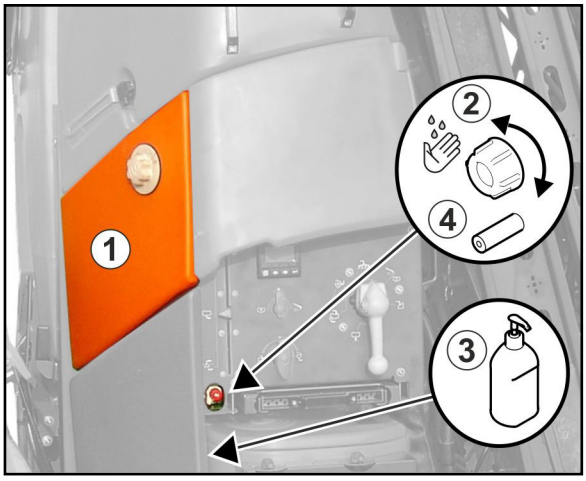

Before using the hand wash facility, fold down the induction bowl and open the cover to collect the wash water.

Only fill the fresh water tank with clear fresh water.

WARNING

Danger of poisoning from using unclean water in the fresh water tank.

Never use the water from the fresh water tank as drinking water. The materials used to construct the fresh water tank are not food-safe.

5.13 Pump equipment

Spraying pump

The spray pump makes water or spray liquid available and has the following functions:

- Spraying the spray liquid
- Agitating the spray liquid
- Cleaning the sprayer
- Flushing in spray agents
- Water intake
- Quick emptying

- **Pump drive via universal joint shaft from the tractor PTO shaft**

  The maximum permissible speed of the tractor PTO shaft for the pump drive is 540 rpm.

- **Hydraulic pump drive**

  The maximum permissible pump speed is 540 rpm.
  The pump speed is reached at an oil volume flow of 11gpm / 43 l/min.

Flushing water pump for continuous internal cleaning

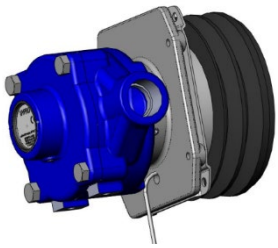

The continuous internal cleaning is switched from the tractor:

- Using a rocker switch
-

using the ISOBUS control terminal

The flushing water pump is driven by the spraying pump using a belt drive.

The pump is not self-priming, not dry running-proof, and must be drained in the winter.

The pump can only be operated when the flushing water tank is full. It is monitored by a float switch.

5.14 Filter equipment

- Use all the filters provided. Clean the filters regularly (see the "Cleaning" section, **on** page 191). Fault-free field sprayer operation can only be achieved by correct filtering of the spray liquid. Correct filtering has a significant effect on the success of the crop protection measures.
- Pay attention to the permissible combinations of filters and mesh sizes. The mesh sizes for the self cleaning pressure filter and the nozzle filters must always be smaller than the nozzle opening of the nozzles in question.
- Ensure that the use of pressure filter inserts with 80 or 100 mesh/inch for some crop protection agents can filter out active agents. In individual cases, enquire with crop protection agent manufacturers.

5.14.1 Suction filter

The suction filter (1) filters

- the spray liquid during the spraying operation.
- the water when filling the spray liquid tank via the suction hose.
- the water during the rinsing process.

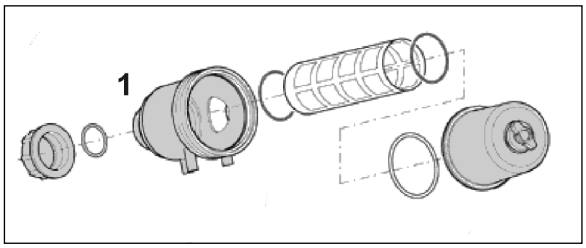

Filter area: 1 in² / 660 mm²
Mesh size: 0,02 in / 0.60 mm

5.14.2 Self cleaning pressure filter

The self cleaning pressure filter

- prevents the nozzle filter upstream of the spraying nozzle from becoming blocked.
- has a greater mesh count/inch than the suction filter.

With the hydraulic agitator switched on, the inside surface of the pressure filter insert is constantly rinsed through, and undissolved particles of spraying agent and dirt are conveyed back into the spray liquid tank.

Overview of the pressure filter inserts

- 50 mesh/inch (standard), blue
  for nozzle size '03' and larger
  Filter area: 0,3 in²/216 mm²
  Mesh size: 0,01 in/0.35 mm
- 80 mesh/inch, yellow
  for nozzle size '02'
  Filter area: 0,3 in²/216 mm²
  Mesh size: 0,007 in/0.20 mm
- 100 mesh/inch, green
  for nozzle size '015' and smaller
  Filter area: 0,3 in²/216 mm²
  Mesh size: 0,005 in/0.15 mm

5.14.3 Nozzle filters

The nozzle filters (1) prevent the spraying nozzle from becoming blocked.

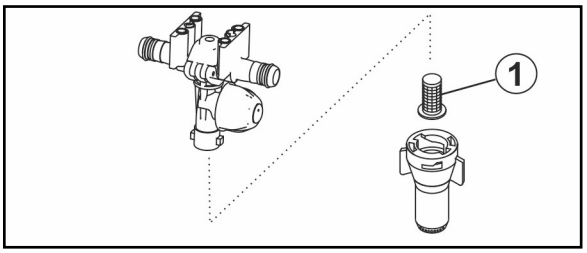

Overview of the nozzle filters

- 24 mesh/inch,
  for nozzle size '06' and larger
  Filter area: 0,8 in²/5.00 mm²
  Mesh size: 0,02 in/0.50 mm
- 50 mesh/inch (standard),
  for nozzle size '02' to '05'
  Filter area: 0,8 in²/5.07 mm²
  Mesh size: 0,01in/0,5 mm
- 100 mesh/inch,
  for nozzle size '015' and smaller
  Filter area: 0,8 in²/5.07 mm²
  Mesh size: 0,005 in/0.15 mm

5.15 Exterior wash down kit (optional)

Exterior wash down kit for cleaning the field sprayer, includes

(1) Hose coiler,

(2) 66 ft (20 m) pressure hose,

(3) Spray gun

Operating pressure: 145 psi (10 bar)

Water output: 4,8 gpm (18 l/min)

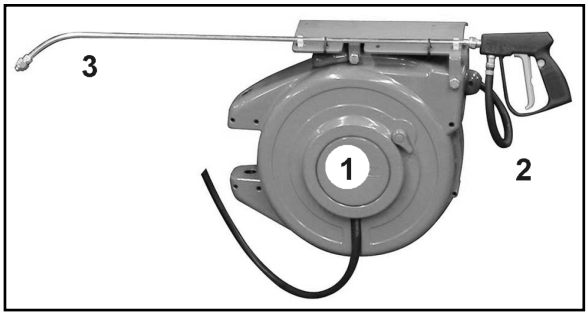

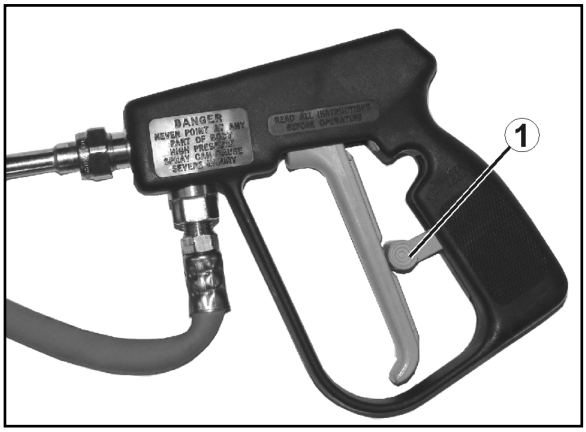

WARNING

Danger from liquids escaping under pressure and contamination with spray liquid if the spray gun is activated accidentally.

Secure the spray gun against unintentional spraying using the locking mechanism (1)

- before each pause in spraying.
- before depositing the spray gun in its holder after cleaning work is complete.

5.16 Work lights

2 variants:

- Separate power supply from the tractor is required, operation via the control box.
- Power supply and operation via ISOBUS.

Work floodlights:

LED-individual nozzle illumination:

5.17 Front tank FT 1001 / FT1502

The front tank is mounted on the front hydraulic system of the tractor.

- The FT1001 has a volume of 264 gal/1000 l
- The FT1502 has a volume of 396 gal/1500 l

5.18 Camera system

WARNING

Risk of injury or even death.

If the camera display only is used for manoeuvring, persons or objects can be overlooked. The camera system is an aid. It does not replace the operator's awareness of the immediate surroundings.

- **Before manoeuvring, ensure that there are no people or objects in the manoeuvring area by taking a direct look**

The implement can be equipped with a camera (1).

Features:

- Viewing angle of 135°
- Heater and lotus coating
- Infrared night-view technology
- Automatic backlight compensation

(1) Camera on the sprayer boom for reversing safely.

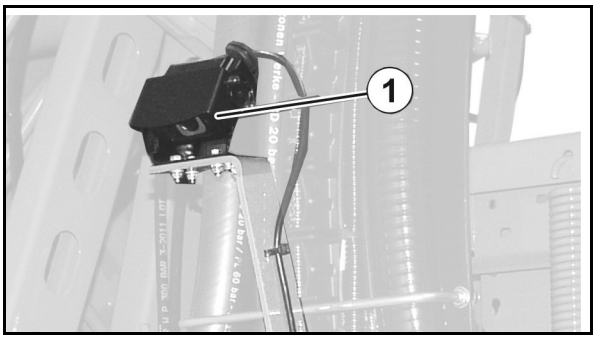

(1) Camera on the front tank for manoeuvring safely.

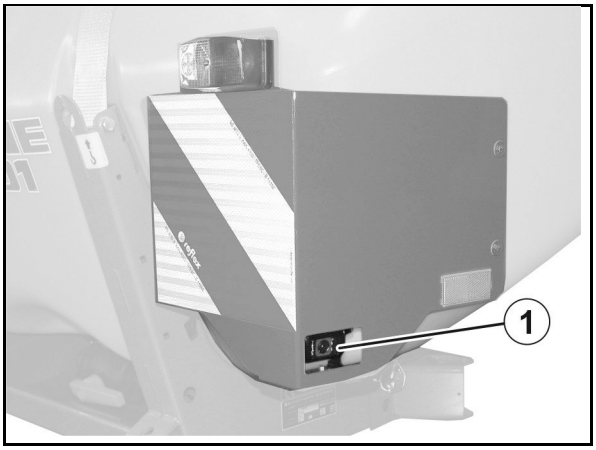

5.19 Personal protective equipment safety kit

The safety kit is the personal protective equipment for handling crop protection products as a handy safety kit case from AMAZONE.

6 Construction and function of the sprayer boom

WARNING

Risk of injury for people due to impact with the sprayer boom when

- **the boom sections swivel to the sides when folding**
- **tilting, lifting or lowering**

Instruct people to leave the danger area of the machine before you operate the sprayer boom.

The proper condition of the sprayer boom and how it is suspended have considerable influence on the distribution accuracy of the spray liquid. With the spraying height of the sprayer boom to the crop set correctly, a complete overlap is achieved. Nozzles are attached to the boom at intervals of 20 in / 50 cm (alternatively 10 in / 25 cm)

Profi-folding:.

The boom is operated via the control terminal.

To do this, locate tractor control unit *red* during use.

See operating manual for software ISOBUS.

Depending on the implement equipment, the following functions can be performed via the boom kinematics function group:

- Folding the sprayer boom in and out,
- Hydraulic height adjustment,
- Hydraulic tilt adjustment,
- Folding in one side of the sprayer boom
- One-sided, independent raising and lowering of the sprayer boom / boom extension (Profi-folding II only).

Folding via the tractor control unit

The boom is operated via tractor control units.

- Depending on the version, sprayer boom folding is preselected via the operating terminal and then executed using tractor control unit *green* (preselected folding).

  See operating manual for software ISOBUS.
- Height adjustment is controlled via tractor control unit *green*.

Folding out and in

CAUTION

It is prohibited to fold the sprayer boom in and out during travel.

DANGER

Always maintain an adequate distance from overhead cables when folding the sprayer boom out and in. Contact with overhead cables may lead to fatal injuries.

WARNING

Risk of crushing the entire body and impact due to personnel becoming trapped by laterally-swivelling machine parts.

These dangers can cause extremely serious and potentially fatal injuries.

Maintain an adequate safety distance from moving machine parts while the tractor engine is running.

Ensure that all personnel maintain an adequate safety distance from moving machine parts.

Instruct personnel to leave the swivel range of any moving machine parts before swivelling the parts.

WARNING

Danger for third parties from crushing, being drawn in and/or caught by the moving parts of the boom or impact if they stand in the swivel range of the boom while it is folding out or in.

- Instruct personnel to leave the swivel range of the boom before you fold the boom out or in.
- Release the control for folding the boom out and in immediately if someone enters the swivel range.

The hydraulic cylinders for boom folding maintain their respective end positions (transport position and working position) in both the folded-in and folded-out boom state.

Working with the sprayer boom folded out on one side

Working with the sprayer boom only folded out on one side is only permissible

- **with the swing compensation locked.**
- only if the other boom is folded down as a package from the transport position (Super S boom).
- briefly for passing obstacles (trees, electricity pylons, etc.).

- Lock the swing compensation before folding up the sprayer boom on one side.

  If the swing compensation is not locked, the sprayer boom may swing off to one side. If the folded-up boom strikes the ground, this may cause damage to the sprayer boom.
- Use a significantly reduced speed for spraying operation to avoid the sprayer boom swinging out and coming into contact with the ground with the swing compensation locked. Unless the sprayer boom is guided smoothly, even lateral distribution cannot be guaranteed.

Setting the spraying height

WARNING

Risk of crushing and impact for personnel who are caught while the height of the sprayer boom is being raised or lowered.

Direct people out of the danger area of the machine before raising or lowering the sprayer boom using height adjustment.

1. Direct people out of the danger area of the machine.
2. Set the spraying height in accordance with the spray table via the

- tractor control unit *yellow* ,
- Control terminal (with Profi-folding).

Always align the sprayer boom parallel to the ground; only then can the specified spraying height be achieved on all nozzles.

Collision protection devices

The collision protection devices protect the sprayer boom from damage when the outer boom section comes up against fixed obstacles. The respective plastic clutch allows the outer boom section to avoid collision by moving around the articulated axle, in and against the direction of travel; it is then automatically returned to its working position.

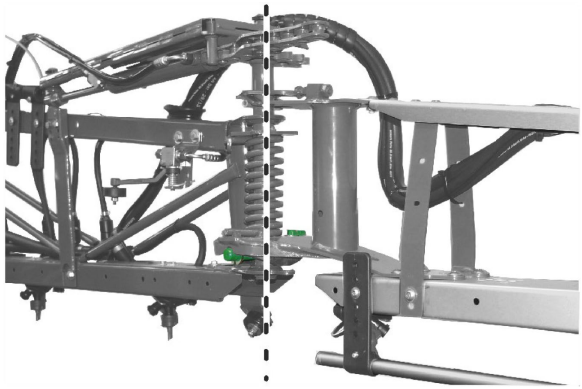

Swing compensation

(1) Swing compensation unlocked.

(2) Swing compensation locked.

For illustration purposes, in this image the protective device has been removed from the swing compensation.

The locking mechanism for the vibration compensation is displayed on the control terminal.

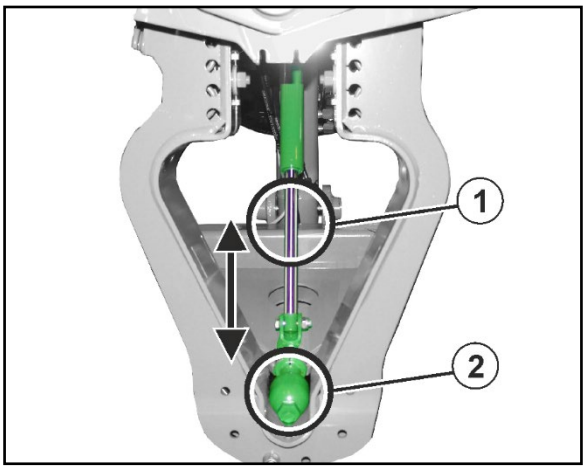

Unlocking the swing compensation:

Even lateral distribution can only be achieved with the swing compensation unlocked.

After the sprayer boom is fully folded out, actuate the operating lever for another 5 seconds.

→ The swing compensation unlocks and the folded-out sprayer boom can swing freely in relation to the boom carrier.

Locking the swing compensation:

- **For road transport**
- **When folding the boom out and in.**

Folding via the tractor control unit *green*: the swing compensation locks automatically before the boom folds in.

Spacer

The spacer prevents collisions of the boom with the ground.

When using certain nozzles, the spacers are within the spray cone.

In this case, attach the spacers horizontally on the carrier.

Use thumb bolts.

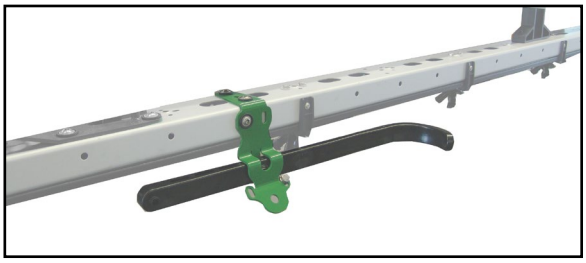

6.1 Super-S boom

Overview Super-S-boom

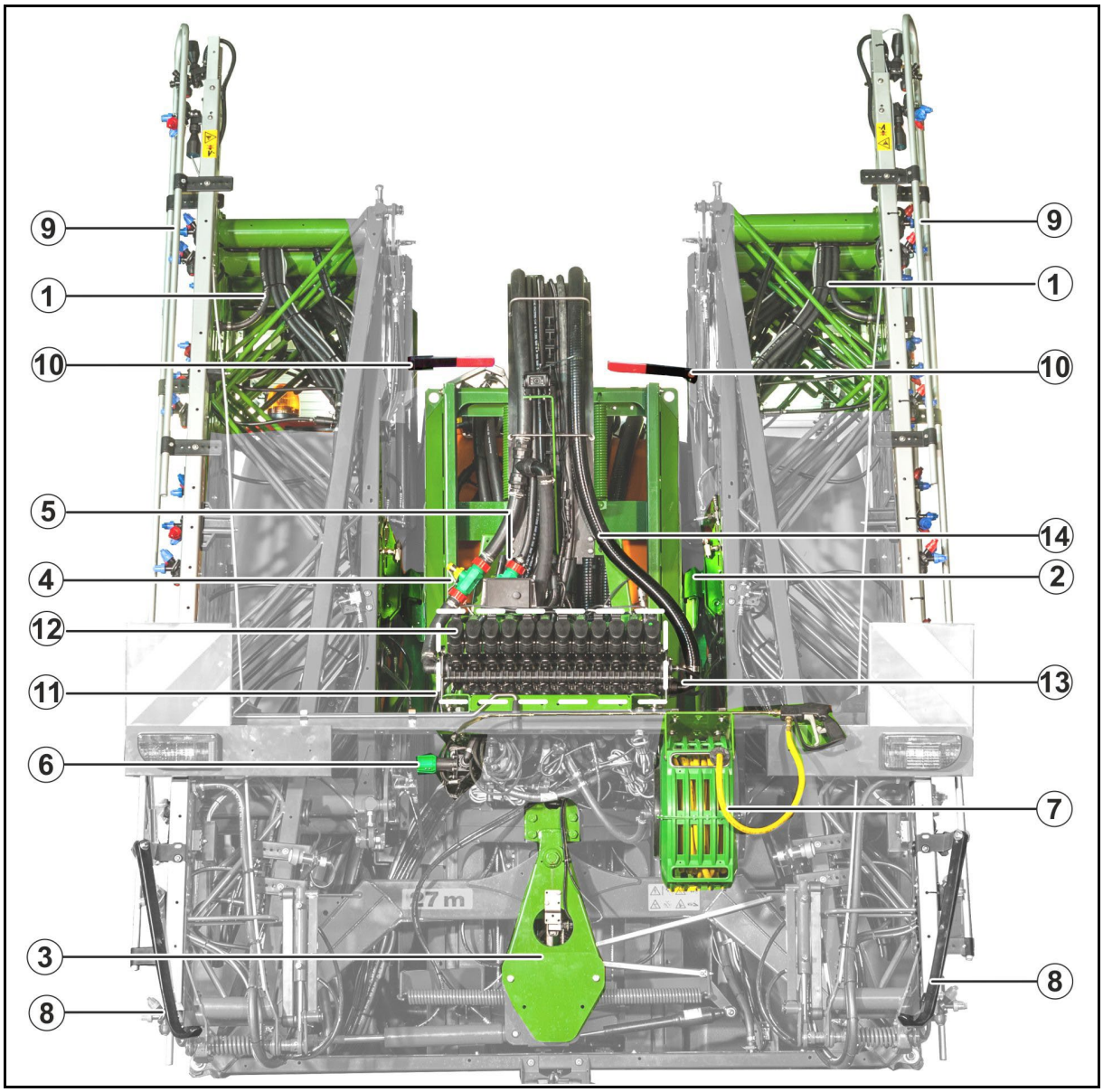

(1) Spray lines

(2) Transport lock

(3) Un-lockable and lockable vibration compensation

(4) Flow meter for determining the application rate [l/ha] (only with rate control)

(5) Return flow meter for determining the quantity of spray liquid delivered back to the spray liquid tank (only with control terminal)

(6) Valve and reverse tap for DUS system

(7) External cleaning

(8) Spacer

(9) Nozzle pipe protection

(10) Visual check of the locking mechanism for the Super-S boom

Part-width section control (alternatively single nozzle control)

(11) Motor valves for switching the part-width sections on and off (operating valve chest)

(12) Bypass valve

(13) Pressure connection for the spraying-pressure pressure gauge

(14) Pressure relief, relieves the overpressure in the spray lines after switching off a part-width section

6.1.1 Unlocking and locking the transport safety catch

WARNING

Risk of crushing and impact for other road users if the boom accidentally unfolds from the transport position during road transport.

Lock the folded boom package in the transport position using the transport safety catch before undertaking road transport.

Unlocking the transport safety catch

Raise the sprayer boom using height adjustment until the catching lugs (1) are released from the catching sockets (2).

→ The transport safety catch unlocks the sprayer boom from the transport position.

The figure shows the unlocked sprayer boom.

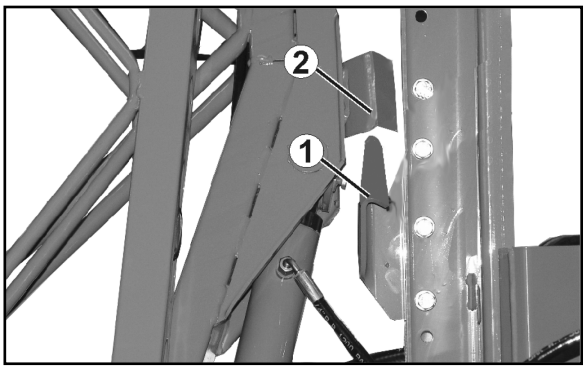

Locking the transport safety catch

Lower the sprayer boom fully using height adjustment until the catching lugs (1) are grasped by the catching sockets (2).

→ The transport safety catch locks the sprayer boom in the transport position.

The figure shows the locked sprayer boom.

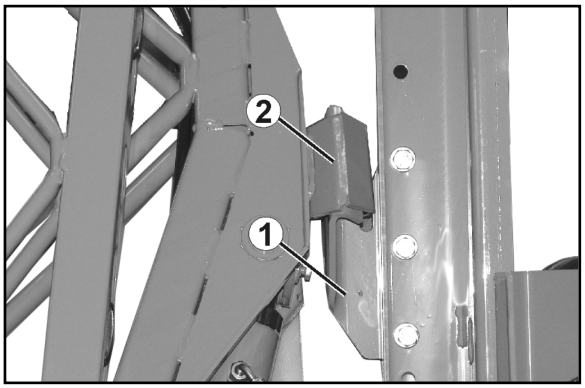

Visually check the locking mechanism for the Super-S boom.

Align the sprayer boom using the tilt adjustment if the catching hooks do not engage in the catching sockets.

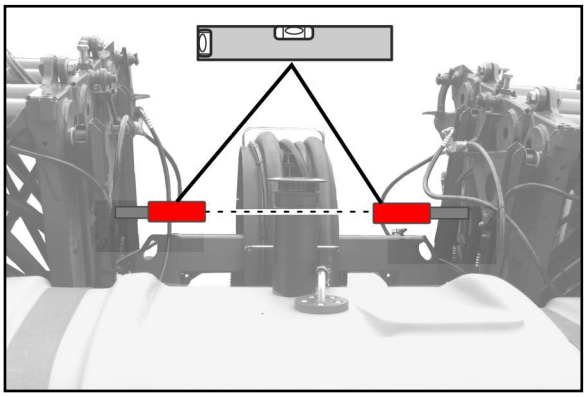

6.1.2 Super-S boom, folding via the tractor control unit

For information on **Profi-folding**, See operating manual for software ISOBUS.

To fold out the sprayer boom, depending on the version, the preselection button "Fold sprayer boom" must be pressed on the operating terminal before tractor control unit *green* is actuated.

See operating manual for software ISOBUS.

Folding out the sprayer boom

1. Actuate **tractor control unit** *yellow* .

→ Raise the boom to unlock it from its transport position.

2. Actuate **tractor control unit** *green* until

→ both boom packages are folded out

→ the individual segments of the two booms are fully folded out and

→ the swing compensation is unlocked.

- The appropriate hydraulic cylinders lock the boom in its working position.
- Folding out does not always happen symmetrically.

3. Actuate **tractor control unit** *yellow*

→ Set the spraying height for the sprayer boom.

Folding in the sprayer boom

1. Actuate **tractor control unit** *yellow*

→ Raise the sprayer boom to a medium height.

2. Set tilt adjustment to "0" (if present).
3. Actuate **tractor control unit** *green* until

→ the individual segments of the two booms are fully folded in.

→ the two boom packages are folded in.

4. Actuate **tractor control unit** *yellow*.

→ Lower the boom, locking it in the transport position.

The swing compensation locks automatically before the boom folds in.

Working with the sprayer boom folded out on one side

Only possible with hydraulic preselected folding (optional).

See operating manual for software ISOBUS.

The sprayer boom is fully folded out.

1. Actuate tractor control unit.

→ Raise the boom to a medium height.

→ Swing compensation locks automatically.

2. Preselect the boom on the operating terminal which is to be folded in.
3. Actuate tractor control unit *green*.

→ The selected boom folds in.

WARNING

After folding in, the boom lifts into the transport position.

→ **Interrupt the folding process at the right point.**

4. Align the sprayer boom using tilt adjustment so it is parallel to the target surface.
5. Set the spraying height for the sprayer boom such that the sprayer boom is a minimum of 1 m off the ground.
6. Switch off the part width sections of the folded-in boom.
7. During spraying operation, drive at a significantly reduced speed.

After one-sided spraying:

8. Cancel the preselection on the operating terminal.
9. Actuate tractor control unit *green* until

→ the folded-in boom is fully folded out again.

→ the swing compensation unlocks.

10. Switch all part width sections back on.

6.2 Q-plus boom

Overview – Q-plus boom

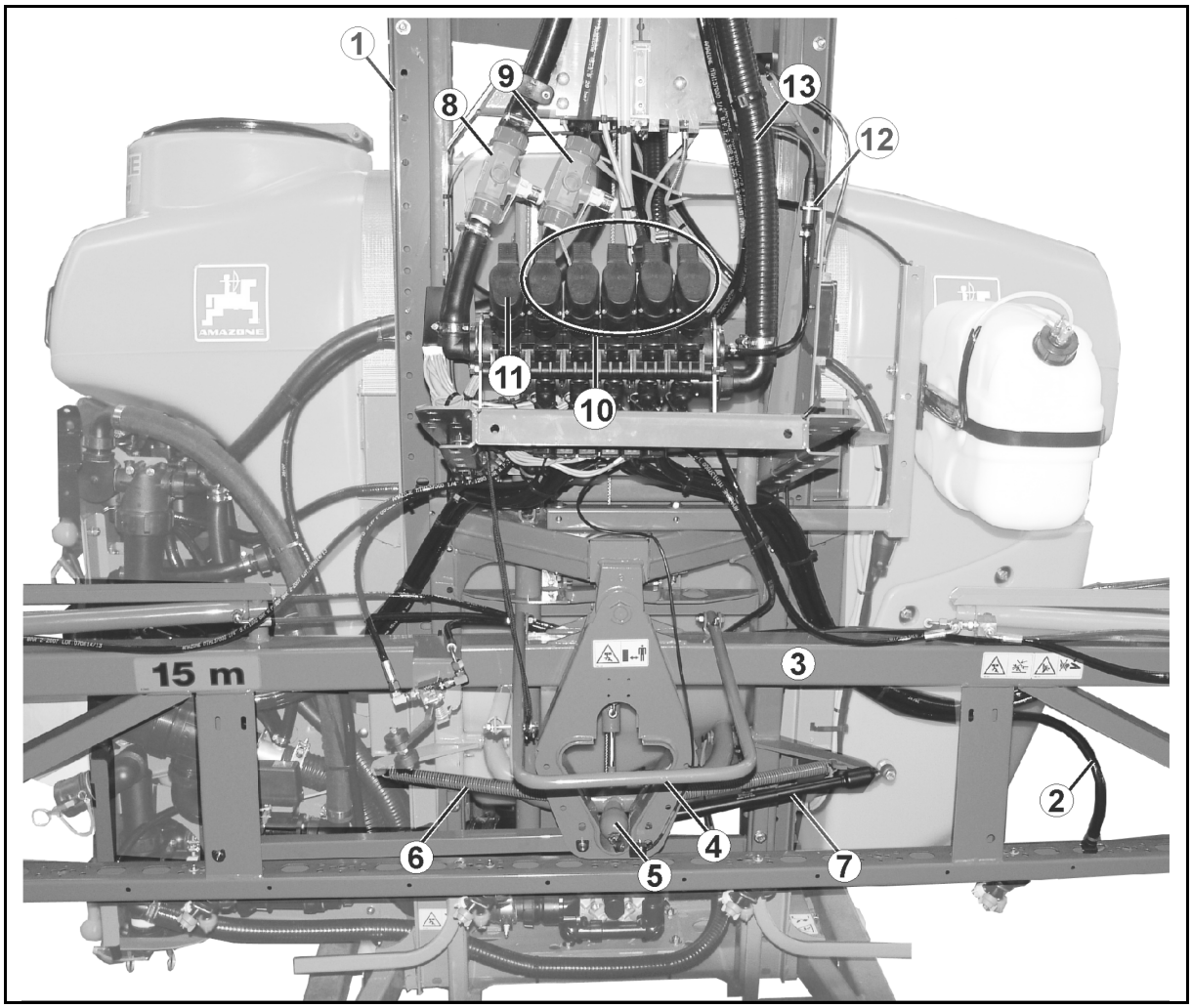

(1) Boom carrier frame for sprayer boom height adjustment

(2) Spray lines

(3) Boom centre section

(4) Transport locking for locking the folded-in sprayer boom in its transport position to prevent it from folding out unintentionally – unlocked in the above example

(5) Lockable swing compensation

(6) Tension springs for parallel boom alignment.

(7) Shock absorber

(8) Flow meter for determining the spray rate [l/ha] (only with quantity regulation)

(9) Return flow meter for determining how much spray liquid is to be conveyed back into the spray liquid tank (Control terminal only)

(10) Motor valves for switching the part width sections on and off (control unit)

(11) Bypass valve

(12) Pressure connection for the spraying-pressure pressure gauge

(13) Pressure relief, reduces excess pressure in the spray lines after a part width section is switched off

6.2.1 Unlocking and locking the transport safety catch

WARNING

Risk of crushing and impact for other road users if the boom accidentally unfolds from the transport position during road transport.

Lock the folded boom package in the transport position using the transport safety catch before undertaking road transport.

Unlocking the transport safety catch

Raise the folded boom package using height adjustment until the automatic transport safety catch releases the locked boom package (height approx. 2/3 of the boom carrier length).

→ The transport safety catch unlocks the sprayer boom from its transport position and the sprayer boom can then be folded out.

The figure shows the **unlocked** transport lock.

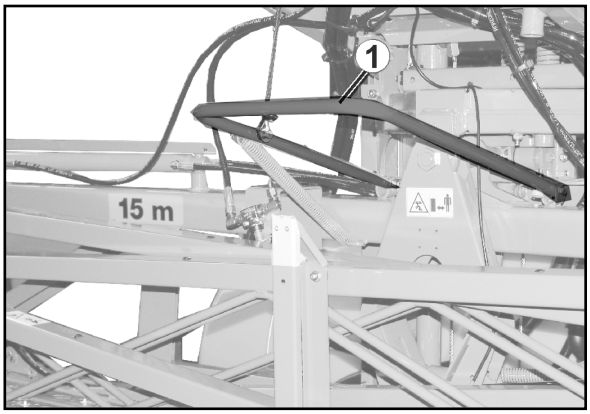

Locking the transport safety catch

Lower the folded boom package using height adjustment until the automatic transport safety catch locks the boom package (the distance between the lower edge of the boom carrier and the lower edge of the sprayer boom is only approx. 30 cm).

→ The transport safety catch locks the sprayer boom in the transport position to prevent the folded boom package from folding out unintentionally.

The figure shows the **locked** transport lock

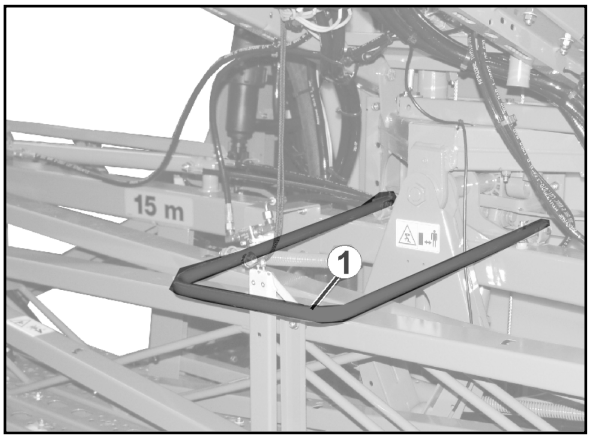

6.2.2 Q-plus boom, folding via the tractor control unit

To fold out the sprayer boom, depending on the version, the preselection button "Fold sprayer boom" must be pressed on the operating terminal before tractor control unit *green* is actuated.

See operating manual for software ISOBUS.

Folding out the sprayer boom

The folded boom package is in the locked transport position.

1. Unlock the transport safety catch. Refer to the section "Unlocking the transport safety catch".
2. Actuate **tractor control unit** *green* until

→ the individual segments of the two booms are fully folded out and

→ the swing compensation is unlocked.

- When unfolding, first the right-hand and then the left-hand boom folds out.
- The swing compensation is unlocked when the green section of the (un)locking indicator is visible.
- The appropriate hydraulic cylinders lock the booms in their working position.

3. Actuate **tractor control unit** *yellow*

→ Set the spraying height for the sprayer boom.

Folding in the sprayer boom

1. Actuate **tractor control unit** *yellow*.

→ Raise the sprayer boom to a medium height.

2. Set tilt adjustment to "0" (if present).
3. Actuate **tractor control unit** *green* until

→ the individual segments of the two booms are fully folded in.

When folding, first the left-hand and then the right-hand boom folds in.

4. Lock the transport safety catch. Refer to the section "Locking the transport safety catch" on page 100.

6.2.3 Working on one side using the right-hand boom

The sprayer boom is fully folded out.

1. Actuate tractor control unit *green* until

→ the left-hand boom is fully folded in.

> The swing compensation locks automatically before the left-hand boom folds in.

2. Actuate tractor control unit *yellow*.

→ Set the spraying height for the sprayer boom such that the sprayer boom is a minimum of one metre off the ground.

→ The automatic transport safety catch locks the folded, left-hand boom.

3. Switch off the boom part width sections of the left-hand boom.
4. During spraying operation, drive at a significantly reduced speed.
5. Unlock the automatic transport safety catch again before folding the left-hand boom back out. Refer to the section "Unlocking the transport safety catch", page 100.

After one-sided spraying:

6. Actuate tractor control unit *green* until

→ the folded-in boom is fully folded out again.

→ the swing compensation unlocks.

7. Switch all part width sections back on.

6.3 Reduction joint on the outer boom (optional)

Using the reduction joint, the outer element of the outer boom can be folded manually to reduce the working width.

Case 1:

Number of nozzles outer part width section	=	Number of nozzles on the foldable outer element

→ When spraying with a reduced working width, keep the outer part width sections switched off.

Case 2:

Number of nozzles outer part width section	≠	Number of nozzles on the foldable outer element

→ Close the outer nozzles manually (triple nozzle head).

→ Perform changes on the control terminal.

- o Enter the changed working width.
- o Enter the changed number of nozzles on the outer part width sections.

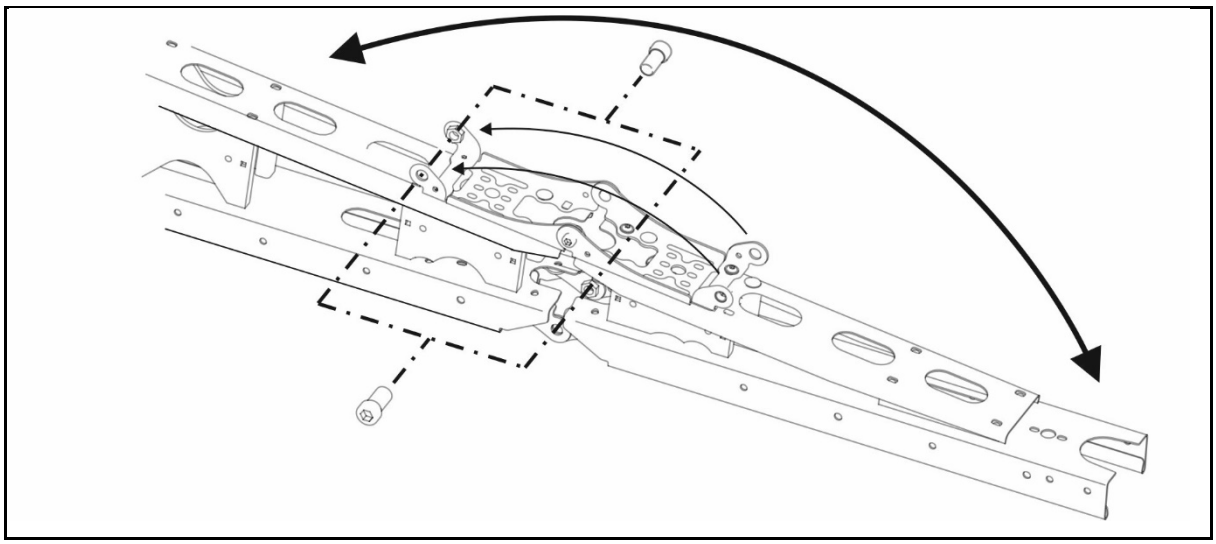

2 bolts lock the folded and unfolded outer element in its respective end positions.

CAUTION
Before road transport, unfold the outer elements again so that the transport locking mechanism is active when the boom is folded.

6.4 Boom width reduction (option)

With the boom width reduction, one or two booms can remain folded in during operation depending on the version.

In addition, switch on the hydraulic accumulator (optional) as a collision protection.

The respective boom part width sections have to be activated in the on-board computer.

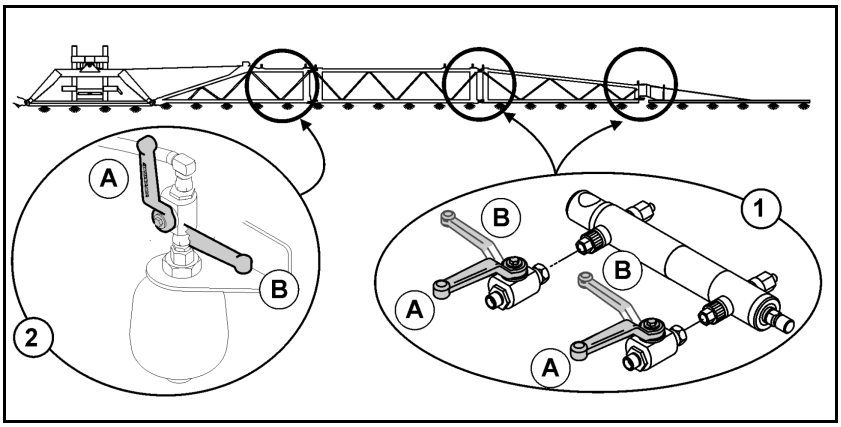

(1) Boom width reduction

(2) Boom width damping, Optional for UF02

(A) Stop tap opened

(B) Stop tap closed

Working with reduced working width

1. Reduce the boom width hydraulically.
2. Close the stop taps for the boom width reduction.
3. Open the stop tap for the boom damping.
4. Deactivate the respective boom part width sections in the on-board computer.
5. Perform work with reduced working width.

Close the stop tap for the boom damping.

- For road transport
- For use with full working width

Sensors on the boom:

If working at reduced working width with automatic boom guidance, a boom section could impair the sensor.

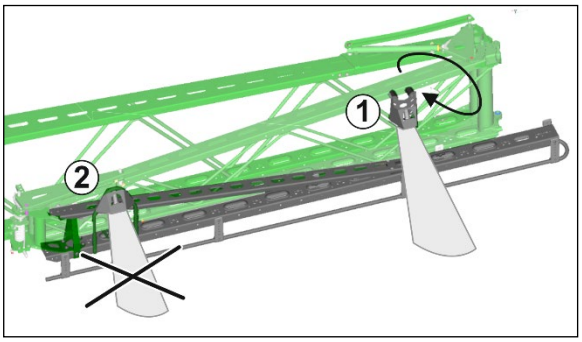

In this case:

(1) Install the sensor rotated 180°.

(2) DistanceControl plus: Disconnect the sensor.

ContourControl: Deactivate the sensor (ISOBUS software).

6.5 Boom extension (option)

The boom extension increases the working width infinitely up to 1.20 metres.

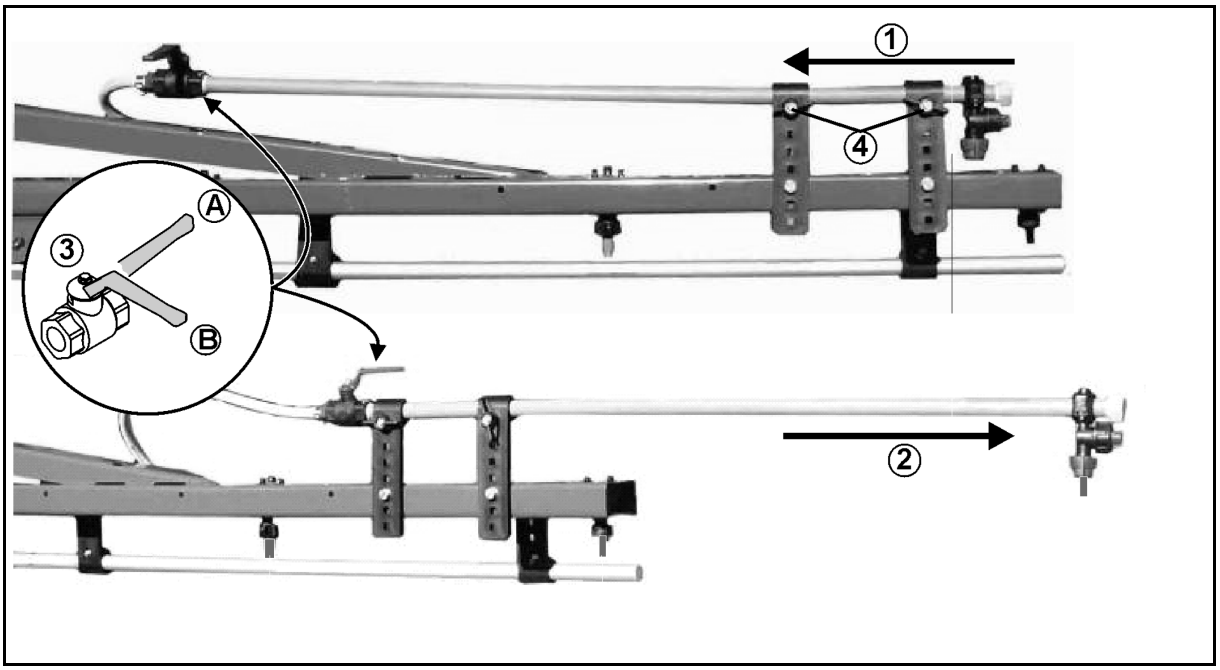

(1) Boom extension in transport position

(2) Boom extension in working position

(3) Stop tap for the outer nozzle

(A) Stop tap opened

(B) Stop tap closed

(4) Wing bolts for securing the boom extension in the transport or working position

6.6 Hydraulic tilt adjustment (optional)

In unfavourable ground conditions, e.g. when there are ruts of variable depth or when driving with one side of the vehicle in a furrow, the sprayer boom can be aligned parallel to the ground or to the target surface using hydraulic tilt adjustment.

Associated information is displayed on the operating terminal.

Depending on the model, it is set either via

- the control terminal or
- tractor control unit *beige*.

See the operating manual for the operating terminal.

6.7 Distance Control / ContourControl

The regulating unit for the sprayer boom automatically holds the sprayer boom parallel at the desired distance from the target surface.

Ultrasound sensors detect the distance to the ground or the crop.

When switching off spraying at the headland, the sprayer boom is raised automatically.

When switched back on again, the sprayer boom is lowered back to the calibrated height.

See operating manual for software ISOBUS.

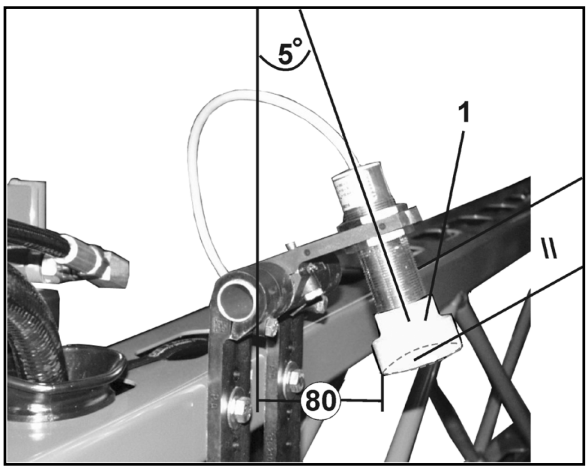

6.8 Spray lines

Spray lines with part-width section valves

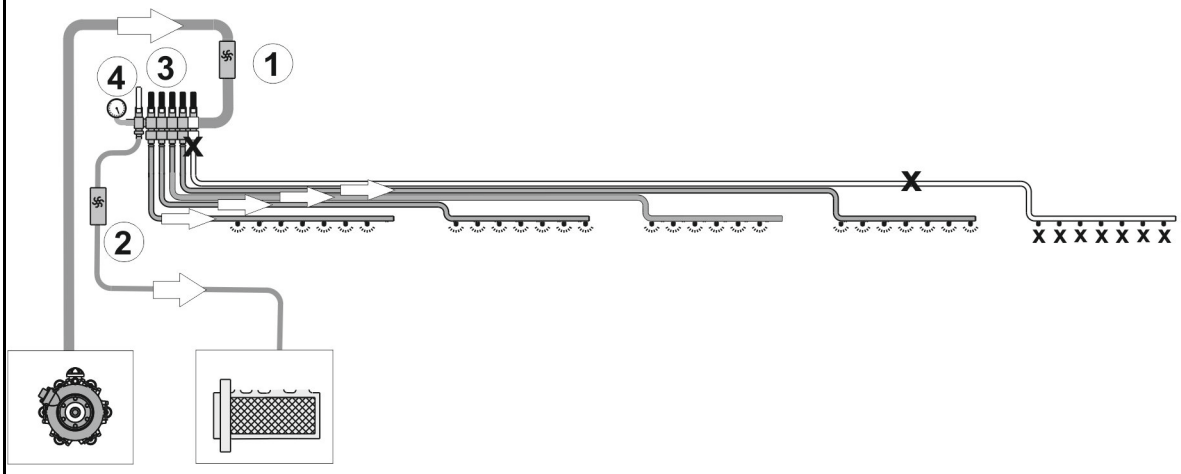

Spray lines with part-width section valves and DUS pressure circulation system

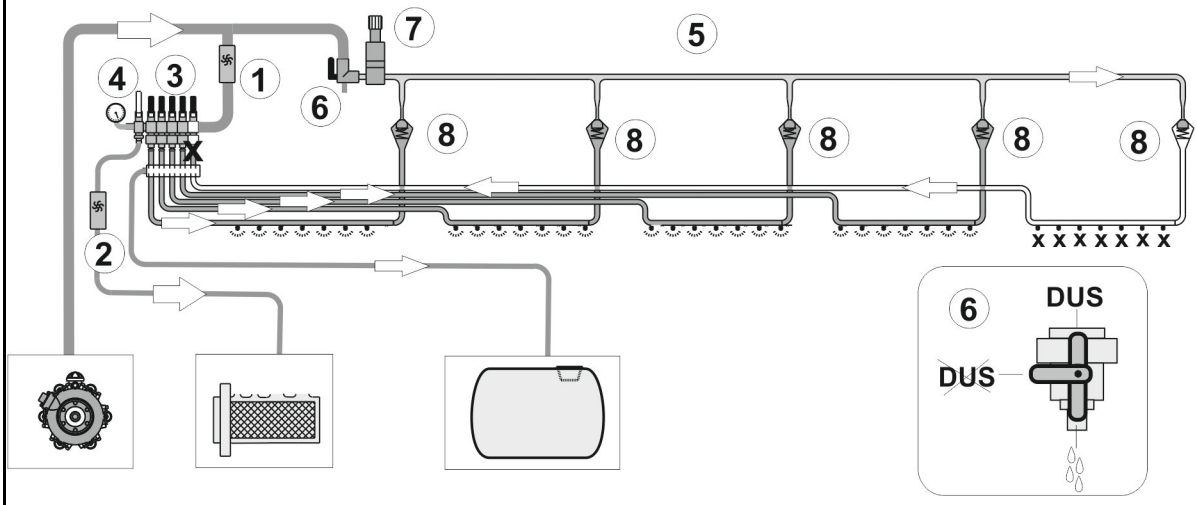

Spray lines with single nozzle control and DUS Pro pressure circulation system

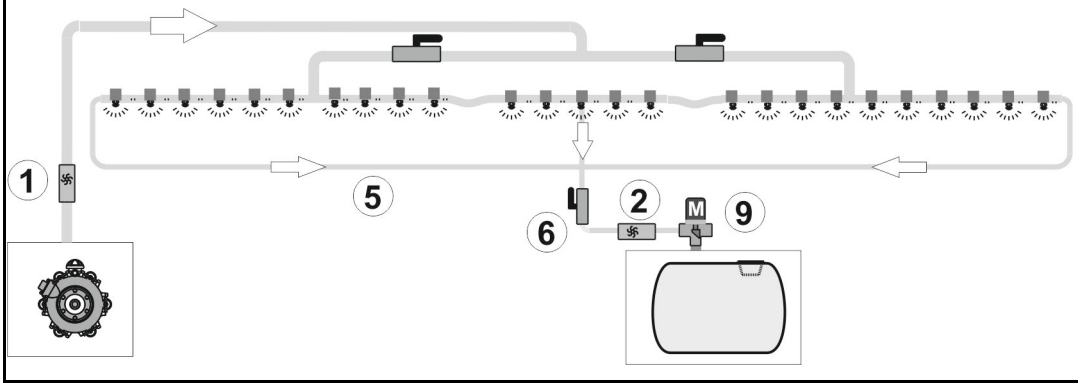

(1) Flow meter
(2) Flow meter
(3) Boom part width section valves
(4) Bypass valve for low application rates
(5) Pressure circulation line
(6) DUS stop tap
(7) Pressure control valve
(8) Check valve
(9) Pressure control valve

DUS pressure circulating system

Part-width section control: Pressure circulating system must generally be switched off when using drag hoses.

The pressure circulating system

- enables the constant circulation of liquid in the spray line. For these purposes, a suction port hose (1) is assigned to each part width section.
- enables operation using spray liquid or flushing water, as desired.
- reduces the undiluted residue for all spray lines to 0,5 gal / 2 l.

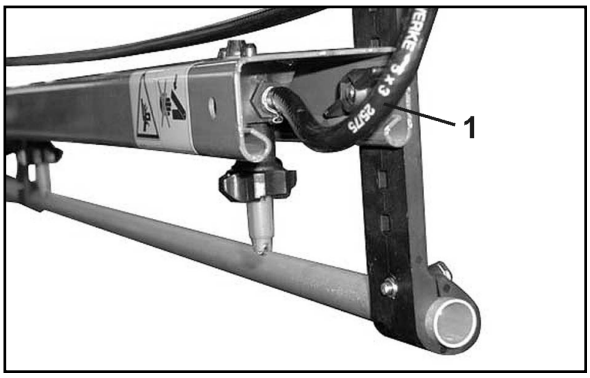

The constant circulation of liquid

- enables production of an even spray pattern right from the start, because spray liquid is available at every spraying nozzle immediately after the sprayer boom is switched on, with no delay.
- prevents damage to the spray line.

Line filter for spray lines (optional

The line filter (1) is

- installed in the spray lines in each part-width section (part-width section control).
- installed in the spray lines on the left and right (single nozzle control)
- an additional measure to prevent contamination of the spraying nozzles.

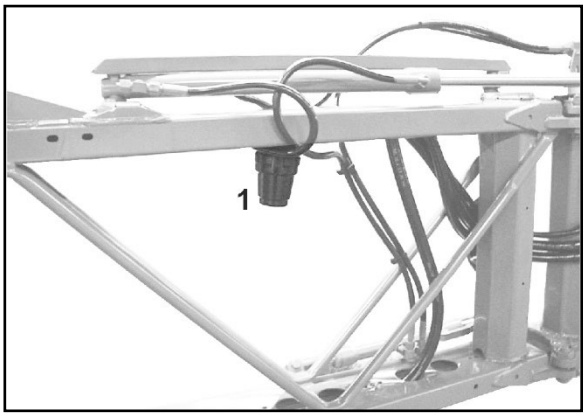

Overview of the filter inserts

- Filter insert with 50 mesh/inch (blue)
- Filter insert with 80 mesh/inch (grey)
- Filter insert with 100 mesh/inch (red)

6.9 Nozzles

(1) Nozzle body with bayonet connection

- o Spring element version with shutter
- o Spring element version, bolted

(2) Diaphragm. If the pressure in the spray line falls below approx. 0.5 bar, the spring element (3) presses the diaphragm onto the diaphragm seat (4) in the nozzle body. This ensures that when the sprayer boom is switched off, the nozzles are deactivated without subsequent dripping.

(3) Spring element.

(4) Shutter; holds the entire diaphragm valve in the nozzle body

(5) Nozzle filter; fitted as standard on machines with 50 mesh/inch, is inserted from below into the nozzle body.

(6) Rubber seal

(7) Nozzle with bayonet cap

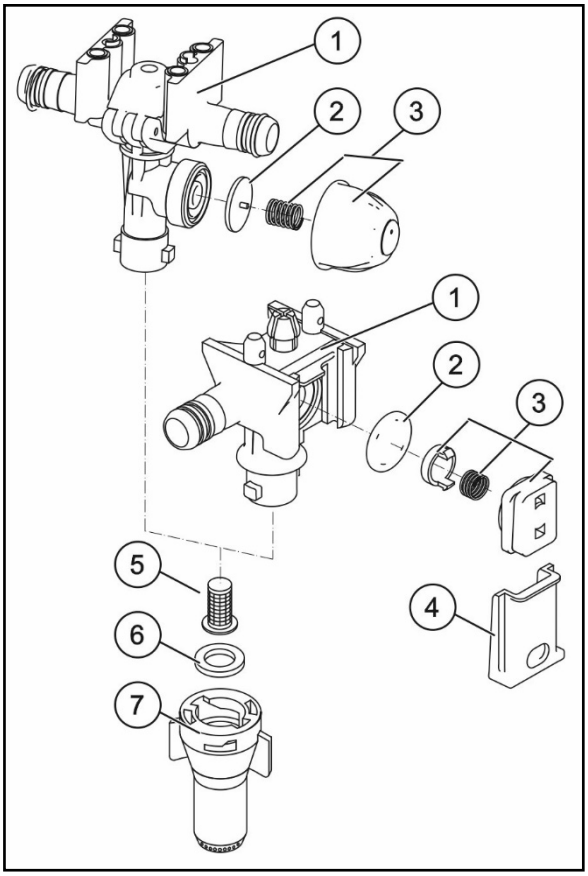

6.9.1 Multiple nozzles

It is advantageous to use multiple nozzle heads when using different nozzle types.

Turning the multiple nozzle head counterclockwise brings a different nozzle into play.

The multiple nozzle head is switched off in the intermediate positions. This provides the possibility of reducing the working width of the boom.

> Flush the spray lines before twisting the multiple nozzle head to another nozzle type.

Triple nozzles (optional)

The vertically positioned nozzle is supplied.

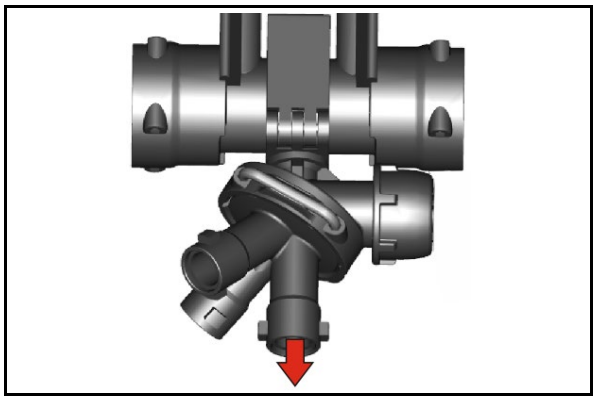

Quadruple nozzles (optional)

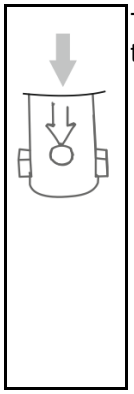

The arrow indicates the vertical nozzle that is being supplied.

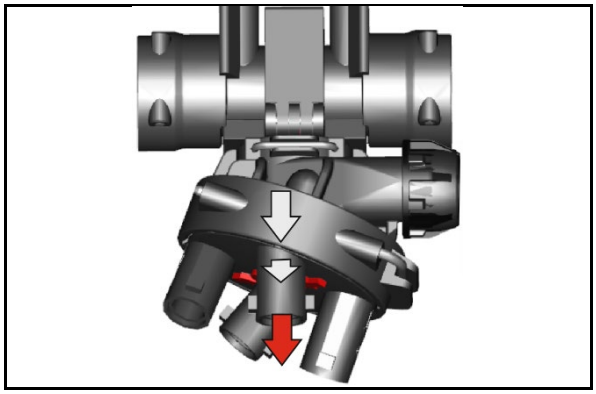

T he quadruple nozzle body can be equipped with a 10 in / 25 cm nozzle holder. This results in a nozzle spacing of 10 in / 25 cm.

The arrow indicates the label 10 in / 25 cm when the nozzle spacing is set at 10 in / 25 cm.

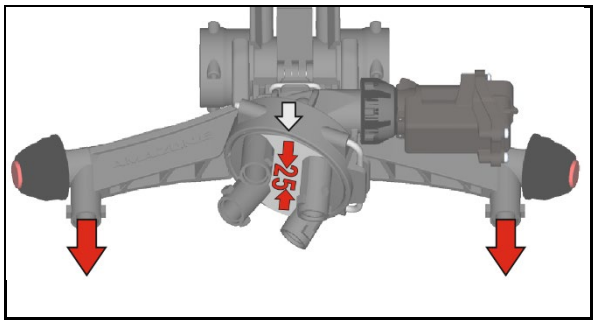

Install the 10 in / 25 cm cm nozzle holder.

If the 10 in / 25 cm nozzle holder is not used, close the supply with plugs.

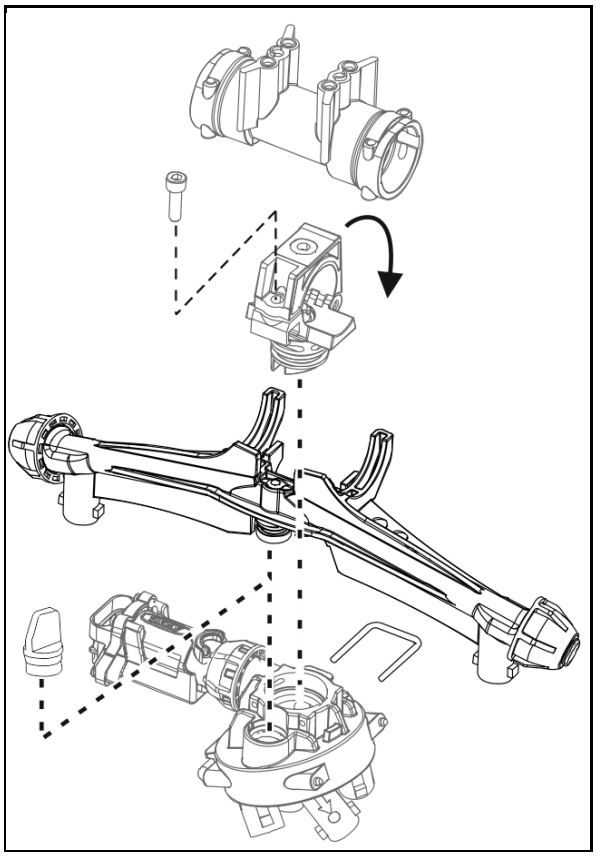

6.9.2 Edge nozzles

Boundary nozzles, electric or manual

With boundary nozzle switching, the last nozzle can be switched off and a border nozzle, 10 in / 25 cm further out (right at the edge of the field), can be electrically switched on.

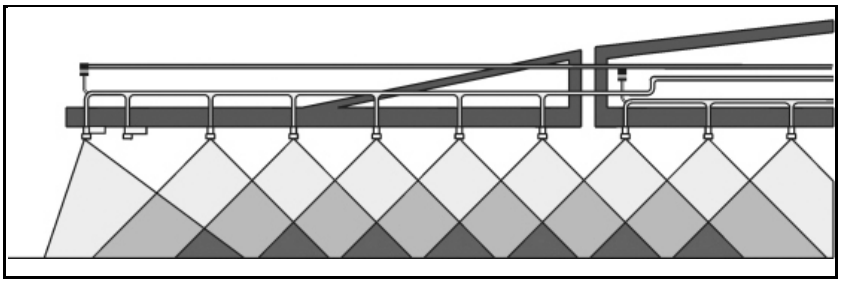

Electric end nozzle switching

Using end nozzle switching, up to three of the outer nozzles at the edge of the field close to a water source can be electrically switched off from the tractor).

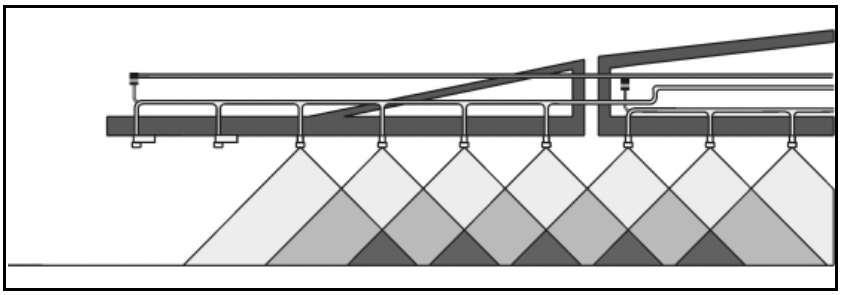

Electric additional nozzle switching

With the additional nozzle switching, another exterior nozzle is cut in, increasing the working width by one metre.

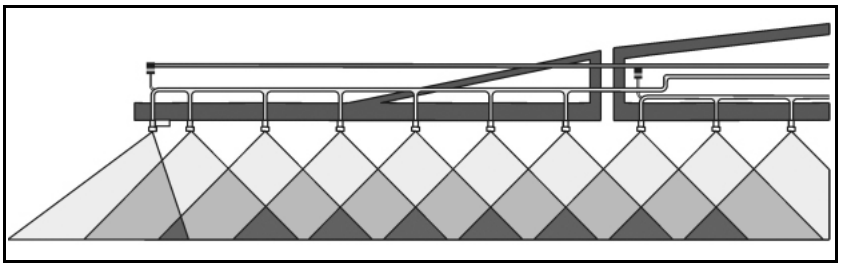

6.10 Automatic single nozzle control

20 in / 50 cm part width sections can be controlled separately by the electric single nozzle control. In combination with the automatic part width section control "Section Control", overlapping can be reduced to a minimum area.

6.10.1 Single nozzle control AmaSwitch

Each nozzle can be switched on and off separately via Section Control.

(1) Nozzle body

(2) Union nut with diaphragm seal

(3) Motor valve

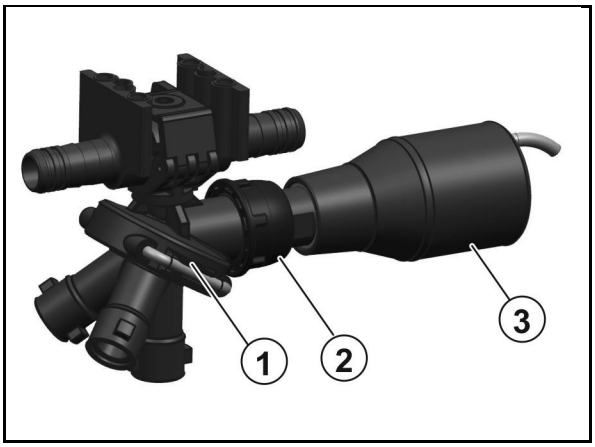

6.11 Special optional equipment for liquid fertiliser

There are currently two main types of liquid fertiliser available:

- Ammonium nitrate / urea solution (AUS) with 28 kg N per 100 kg AUS.
- An NP solution 10-34-0 with 10 kg N and 34 kg P_2O_5 per 100 kg NP solution.

If the liquid fertiliser is sprayed using flat-fan nozzles, multiply the corresponding values from the spray table for the spray rate gal/ac (l/ha) by 0.88 for AUS and by 0.85 for NP solutions, as the spray rates listed in gal/ac (in l/ha) only apply for water.

As a rule:

Use coarse-dropped application for liquid fertiliser to avoid chemical burns to the plants. Overly large drops roll off the leaf and drops which are too small cause a magnifying glass effect, which burns the leaves. Too much fertiliser may cause burns to appear on the leaves due to the salt concentration in the fertiliser.

As a rule, do not spray more liquid fertiliser than, for example, 40 kg N (see also "Conversion table for spraying liquid fertiliser"). Always discontinue nozzle-based AUS fertilisation at development stage EC-39, because chemical burns to on ears have a particularly bad effect.

6.11.1 Three-ray nozzles

The use of three-ray nozzles for applying liquid fertiliser is beneficial if the liquid fertiliser needs to be taken up more by the roots of the plant than through the leaves.

Thanks to its three openings, the dosing aperture, which is integrated into the nozzle, ensures a coarse-dropped, almost depressurised distribution of the liquid fertiliser. This prevents an undesirable spray mist and the formation of smaller drops. The coarse drops produced by the three-ray nozzle hit the plants with little force and roll off their surface. **Although this avoids damage from burns to the greatest extent possible, avoid the use of three-ray nozzles for late top dressing and use drag hoses.**

For all three-ray nozzles listed in the following, only use the black bayonet nut.

Different three- ray nozzles and their operational areas (at 5mph / 8 km/h)

- Yellow 5,3 – 8,5 gal/ac / 50 - 80 l AUS/ha
- Red, 8,5 – 13,5 gal/ac / 80 - 126 l AUS/ha
- Blue, 12,3 – 19 gal/ac / 115 - 180 l AUS/ha
- White, 16,5 – 7,6 gal/ac / 155 - 267 l AUS/ha

6.11.2 7 hole nozzles / FD- nozzles

The same conditions apply for using 7 hole nozzles / FD nozzles as for the three-ray nozzles. In contrast to the three-ray nozzle, in the case of the 7 hole nozzle / FD nozzles, the outlets are not oriented downwards, but instead point to the side. This allows very large drops to be produced on the plants using only slight impact forces.

The following 7-hole nozzles are available

- SJ7-02-CE 74 – 120l AHL (at 8 km/h)
- SJ7-03-CE 110 – 180l AHL
- SJ7-04-CE 148 – 240l AHL
- SJ7-05-CE 184 – 300l AHL
- SJ7-06-CE 222 – 411l AHL
- SJ7-08-CE 295 – 480l AHL

The following FD nozzles are available:

- FD 04 150 - 240 l AHL/ha (at 8 km/h)
- FD 05 190 - 300 l AHL/ha
- FD 06 230 - 360 l AHL/ha
- FD 08 300 - 480 l AHL/ha
- FD 10 370 - 600 l AHL/ha*

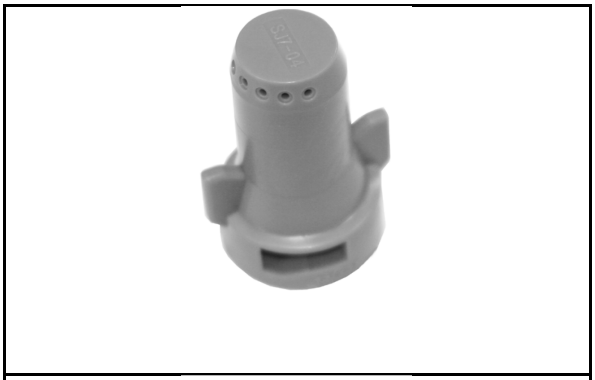

6.11.3 Drag hose unit for liquid fertiliser (optional)

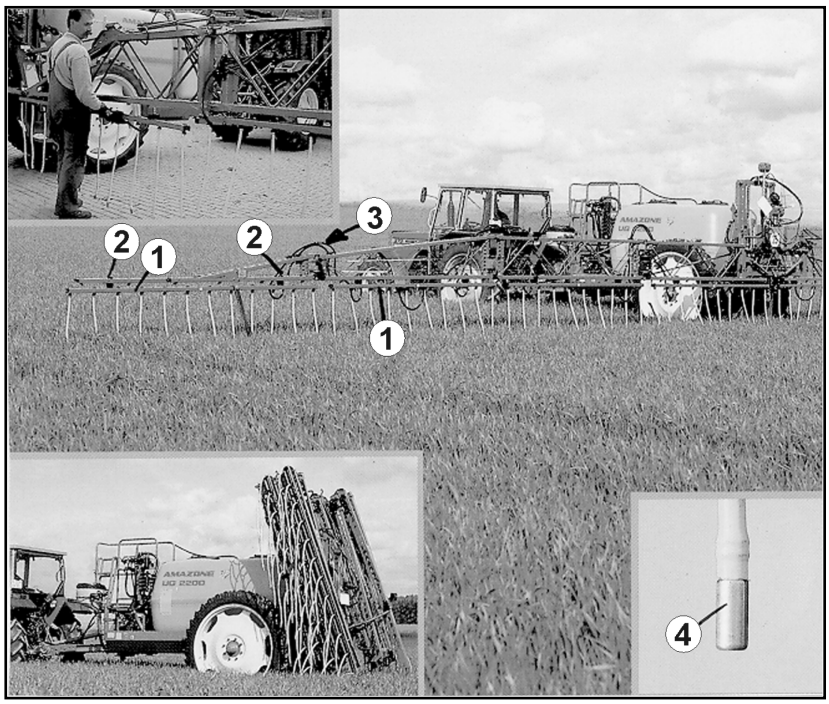

(1) Numbered, separate drag hose part width sections with 25 cm nozzle distance and hose distance. No. 1 on the left-hand side is fitted on the outside (looking in the direction of travel), no. 2 next to it and so on.

(2) Thumb nuts for securing the drag hose unit.

(3) Turned plug connection for connecting the hoses.

(4) Metal weights - stabilise the position of the hoses during operation.

The dosing discs determine the spray rate [l/ha].

The following dosing discs are available

(at 5 mph / 8 km/h)

- 4916-26 dia. 0.65 5,3 – 11 gal/ac / 50 - 104 l AUS/ha
- 4916-32 dia. 0.8 0,9 -17 gal/ac / 80 - 162 l AUS/ha
- 4916-39 dia. 1.0 12-24 gal/ac / 115 - 226 l AUS/ha (standard)
- 4916-45 dia. 1.2 16-33 gal/ac / 150 - 308 l AUS/ha
- 4916-55 dia. 1.4 24-48 gal/ac / 225 - 450 l AUS/ha

Refer to the section "Spray table for the drag hose unit", on page 247.

7 Commissioning

This section contains information

- on commissioning your machine.
- on checking if it is possible to connect the machine to your tractor.

- Before operating the machine for the first time the operator must have read and understood the operating manual.
- Comply with the section "Safety information for the user", starting on page 29 when
  - coupling and uncoupling the machine
  - transporting the machine
  - using the machine
- Only couple and transport the machine to a tractor which is suitable for the task.
- The tractor and machine must meet the national road traffic regulations.
- The operator and the user shall be responsible for compliance with the statutory road traffic regulations.

WARNING

Risk of crushing, shearing, cutting, and being drawn in or trapped in the vicinity of hydraulically or electrically actuated components.

Do not block the operator controls on the tractor which are used for hydraulic and electrical movements of components, e.g. folding, swivelling and pushing movements. The movement must stop automatically when you release the appropriate control. This does not apply to equipment movements that:

- are continuous or
- are automatically locked or
- require a floating position or pressed position to function

7.1 Antifreeze in the spray liquid tank

Depending on the season and marking on the implement, the implement is protected with a biodegradable antifreeze against damage due to freezing temperatures.

The antifreeze can be sprayed out with the spray liquid at first use or pumped out.

Antifreeze that was pumped out can be reused or disposed of properly.

7.2 Checking the suitability of the tractor

WARNING

Risk of breaking during operation, insufficient stability and insufficient tractor steering and braking power from improper use of the tractor.

- Check the suitability of your tractor, before connecting the machine to the tractor.

  You may only connect the machine to tractors suitable for the purpose.
- Carry out a brake test to check whether the tractor achieves the required braking rate with the machine connected.

Requirements for the suitability of a tractor are, in particular:

- Permissible total weight
- Permissible approved axle loads
- Permissible drawbar load at the tractor coupling point
- Load capacity of the tyres fitted
- The approved trailer load must be sufficient

  You can find this data on the rating plate or in the vehicle documentation and in the tractor operating manual.

The front axle of the tractor must always be subjected to at least 20% of the dead-weight of the tractor.

The tractor must achieve the brake rate specified by the tractor manufacturer, even with the machine connected.

7.2.1 Calculating the actual values for the total tractor weight, tractor axle loads and tyre load capacities, as well as the minimum ballast

The permissible total tractor weight, specified in the vehicle documentation, must be greater than the sum of the

- Tractor empty weight,
- Ballast weight and
- Total weight of the connected machine or drawbar load of the connected machine

This information is only valid for the Federal Republic of Germany:

If, having tried all possible alternatives, it is not possible to comply with the axle loads and / or the permissible total weight, then a survey by an officially-recognised motor vehicle traffic expert can, with the approval of the tractor manufacturer, be used as a basis for the authority responsible to issue an exceptional approval according to § 70 of the German Regulations Authorising the Use of Vehicles for Road Traffic and the required approval according to § 29, paragraph 3 of the German Road Traffic Regulations.

7.2.1.1 Data required for the calculation

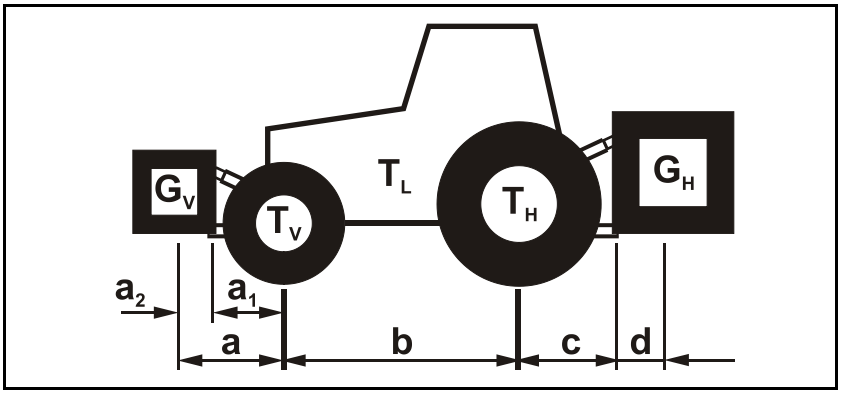

Fig. 4

T_L	lb [kg]	Base (empty) tractor weight	See tractor operator's manual or vehicle documentation
T_V	lb [kg]	Front axle load of the base tractor	
T_H	lb [kg]	Rear axle load of the base tractor	
G_H	lb [kg]	Total weight of rear-mounted implement or rear ballast	See technical data for implement or rear ballast
G_V	lb [kg]	Total weight of front-mounted implement or front ballast	See technical data for front-mounted implement or front ballast
a	ft [m]	Distance between the center of gravity of the front implement mounting or the front weight and the center of the front axle (total $a_1 + a_2$)	See technical data of tractor and front implement mounting or front weight or measure
a_1	ft [m]	Distance from the center of the front axle to the center of the lower link connection	See tractor operator's manual or measure
a_2	ft [m]	Distance between the center of the lower link connection point and the center of gravity of the front implement mount or front weight (center of gravity distance)	See technical data of front implement mounting or front weight or measure
b	ft [m]	Tractor wheel base	See tractor operator's manual or vehicle documents or measure
c	ft [m]	Distance between the center of the rear axle and the center of the lower link connection	See tractor operator's manual or vehicle documents or measure
d	ft [m]	Distance between the center of the lower link connection point and the center of gravity of the rear-mounted implement or rear ballast (center of gravity distance)	See technical data of implement

7.2.1.2 Calculation of the required minimum ballasting at the front $G_{V\ min}$ of the tractor to ensure steering capability

$$G_{V\ \min} = \frac{G_H \bullet (c+d) - T_V \bullet b + 0{,}2 \bullet T_L \bullet b}{a+b}$$

Enter the numeric value for the calculated minimum ballast, $G_{V\ min}$, required on the front of the tractor, in the table (page 121).

7.2.1.3 Calculation of the actual front axle load of the tractor $T_{V\ tat}$

$$T_{V\ tat} = \frac{G_V \bullet (a+b) + T_V \bullet b - G_H \bullet (c+d)}{b}$$

Enter the numeric value for the calculated actual front axle load and the approved tractor front axle load specified in the tractor operating manual, in the table (page 121).

7.2.1.4 Calculation of the actual total weight of the combined tractor and machine

$$G_{tat} = G_V + T_L + G_H$$

Enter the numeric value for the calculated actual total weight and the approved total tractor weight specified in the tractor operating manual in the table (page 121).

7.2.1.5 Calculation of the actual rear axle load of the tractor $T_{H\ tat}$

$$T_{H\ tat} = G_{tat} - T_{V\ tat}$$

Enter the numeric value for the calculated actual rear axle load and the approved tractor rear axle load specified in the tractor operating manual in the table (page 121).

7.2.1.6 Tractor tyre load-bearing capacity

Enter double the value (two tyres) of the permissible load capacity (see, for example, the tyre manufacturer's documentation) in the table (page 121).

7.2.1.1 Table

	Actual value according to calculation		Approved value according to tractor operator's manual		Double approved load capacity (two tires)
Minimum ballast front / rear	/ lb [kg]		--		--
Total weight	lb [kg]	≤	lb [kg]		--
Front axle load	lb [kg]	≤	lb [kg]	≤	lb [kg]
Rear axle load	lb [kg]	≤	lb [kg]	≤	lb [kg]

- You can find the approved values for the total tractor weight, axle loads and load capacities in the tractor registration papers.
- The actual calculated values must be less than or equal to (≤) the permitted values!

WARNING

Risk of contusions, cutting, catching, drawing in and being knocked down through insufficient stability and insufficient tractor steering and/or brake power.

It is prohibited to connect the implement to the tractor used as the basis for calculation if:

- one of the actual, calculated values is greater than the approved value
- there is no front weight (if required) attached to the tractor for the minimum front ballast ($G_{V\ min}$).

- Ballast your tractor with weights at the front or rear if the tractor axle load is exceeded on only one axle.
- Special cases:
  - If you do not achieve the minimum ballast at the front (GV min) from the weight of the front-mounted implement (GV), you must use ballast weights in addition to the front-mounted implement.
  - If you do not achieve the minimum ballast at the rear (GH min) from the weight of the rear-mounted implement (GH), you must use ballast weights in addition to the rear-mounted implement.

7.3 Installing the PTO shaft

CAUTION

- **Use only the PTO shaft prescribed by AMAZONE.**
- **Only install the PTO shaft before the field sprayer is fitted and with the tanks empty.**

1. Clean and grease the pump input shaft (1).
2. Press in the PTO shaft spring pin (1).
3. Insert the PTO shaft until the spring pin engages, securing the PTO shaft axially.
4. Secure the PTO shaft guard against simultaneous rotation by attaching the chain (2) to the machine (2).

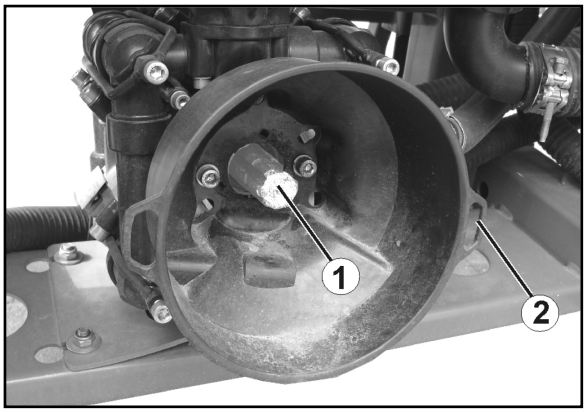

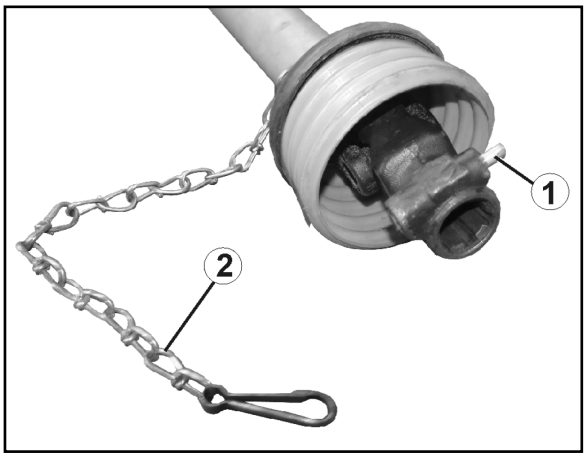

7.4 Adjusting the length of the PTO shaft to the tractor

WARNING

Danger from

- **damaged and/or destroyed, flying parts for the operator / third party if the PTO shaft is compressed or pulls apart while the machine coupled to the tractor is being raised/lowered, because the length of the PTO shaft has not been adjusted properly.**
- **being caught and drawn in if the PTO shaft is installed incorrectly or if unauthorised design changes are made.**

Have the length of the PTO shaft checked in all operating positions by a specialist workshop and, if necessary, adjusted before coupling the PTO shaft to your tractor for the first time.

Always observe the operating manual supplied with the PTO shaft when adjusting the PTO shaft.

This adjustment of the PTO shaft applies only for the current tractor type. You may need to readjust the PTO shaft if you couple the machine to another tractor.

WARNING

Risk of being caught and drawn in if the PTO shaft is installed incorrectly or if unauthorised design changes are made.

Only a specialist workshop may make design changes to the PTO shaft. When doing so, read and follow the operating manual from the manufacturer.

Adjusting the length of the PTO shaft is permitted with consideration of the minimum profile overlap.

Design changes to the PTO shaft that are not described in the operating manual from the PTO shaft manufacturer are not permitted.

WARNING

Risk of crushing between the rear of the tractor and the machine when raising and lowering the machine to determine the shortest and longest operating position of the PTO shaft.

Only actuate the operator controls for the tractor's three-point linkage

- from the intended workstation.
- if you are outside of the danger area between the tractor and the machine.

WARNING

Risk of crushing from unintentional:

- **rolling of the tractor and the connected machine.**
- **lowering of the raised machine.**

Secure the tractor and machine from unintentionally starting or rolling and secure the raised machine against unintentional lowering before entering the danger zone between the tractor and raised machine in order to adjust the PTO shaft.

The PTO shaft is at its shortest when it is horizontal. The PTO shaft is at its longest when the machine is fully lifted.

1. Couple the tractor to the machine (do not connect the PTO shaft).
2. Apply the tractor's parking brake.
3. Determine the clearance height of the machine with the shortest and longest operating position for the PTO shaft.
   3.1 To do so, raise and lower the machine via the tractor's three-point hydraulic system.
   While doing so, actuate the manual controls for the tractor's three-point hydraulic system on the rear of the tractor, from the provided workstation.
4. Secure the machine, lifted in the measured clearance height, against unintentional lowering (for example, by supporting it or hooking it to a crane).
5. Secure the tractor from unintentional starting before entering the danger area between the tractor and machine.
6. When measuring the length and shortening the PTO shaft, read and follow the operating manual from the PTO shaft manufacturer.
7. Put the shortened halves of the PTO shaft back together.
8. Grease the universal joint shaft of the tractor and the pump input shaft before connecting the PTO shaft.
   The tractor symbol on the protective tube of the PTO shaft identifies the tractor-side connection of the PTO shaft.

7.5 Securing the tractor / machine against unintentional start-up and rolling

WARNING

Risk of crushing, shearing, cutting, being caught and/or drawn in, or impact when making interventions in the machine, through

- **unintentional falling of the unsecured machine raised using the tractor's three-point linkage.**
- **unintentional falling of raised, unsecured machine parts.**
- **unintentional start-up and rolling of the tractor-machine combination.**
- Secure the tractor and the machine against unintentional start-up and rolling before making any intervention in the machine.
- It is forbidden to make any intervention in the machine, such as installation, adjustment, troubleshooting, cleaning, maintenance and repairs
  - when the machine is running
  - for as long as the tractor engine is running with a connected PTO shaft / hydraulic system.
  - when the ignition key is inserted in the tractor and the tractor engine with the connected PTO shaft / hydraulic system could be started unintentionally.
  - when the tractor and machine are not secured against unintentional rolling using their parking brakes and/or wheel chocks.
  - when moving parts are not locked against unintentional movement.

  When carrying out such work, there is a high risk of contact with unsecured components.

1. Lower the raised, unsecured machine / raised, unsecured parts of the machine.

→ This is how to prevent unintentional falling:

2. Shut down the tractor engine.
3. Remove the ignition key.
4. Apply the tractor's parking brake.
5. Secure the machine against unintentional rolling (only attached machine)
   - On flat ground using the parking brake (if present) or wheel chocks.
   - On uneven ground or slopes using the parking brake and wheel chocks.

7.6 Adjusting the hydraulic system

Profi-folding: The hydraulic block is located at the front right on the implement.

- Be sure to match the hydraulic systems of the tractor and the implement.
- The implement hydraulic system is adjusted using the system setting screw on the hydraulic block of the implement.
- Elevated hydraulic oil temperatures are the result of incorrect adjustment of the system setting screw, caused by persistent strain on the pressure relief valve of the tractor hydraulic system.
- Adjustments may only be made in a pressureless state!
- If there are hydraulic malfunctions between the tractor and the implement during start-up, please contact your service partner.

(1) Setting tap can be set to Position A and B
(2) LS connection for the load sensing control line

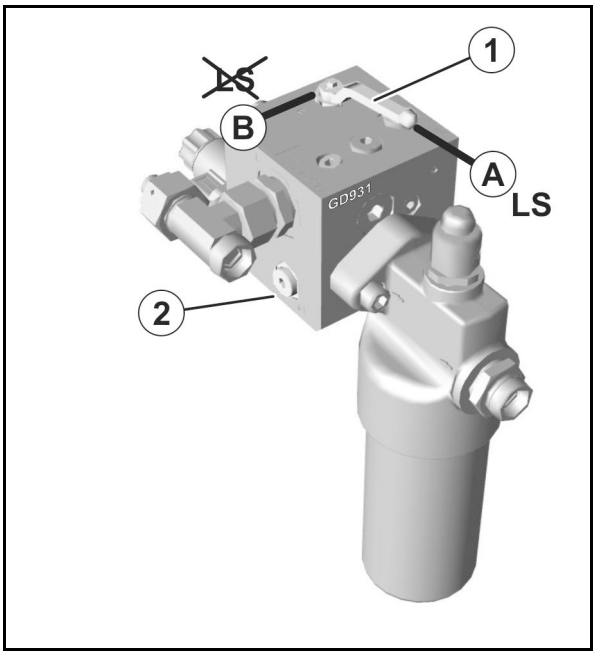

Implement-side connections in compliance with ISO15657:

(1) P – feed line, pressure line, plug standard width 20
(2) LS – control line, plug standard width 10
(3) T - return line, socket standard width 20

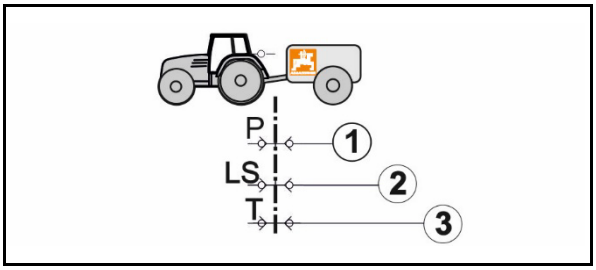

(1) Open-Center hydraulic system with constant flow pump (gear pump) or setting pump.

→ Select setting B.

Setting pump: Set the maximum required oil quantity on the tractor control unit. If the oil quantity is insufficient, correct functioning of the implement cannot be ensured.

(2) Load-Sensing hydraulic system (pressure- and flow-regulated setting pump) with direct load sensing pump connection and LS setting pump.

→ Select setting A

(3) Load-Sensing hydraulic system with constant flow pump (gear pump).

→ Select setting A

(4) Closed-Center hydraulic system with pressure-regulated setting pump.

→Select setting B

Risk of overheating of the hydraulic system: the Closed-Center hydraulic system is less suitable for the operation of hydraulic motors.

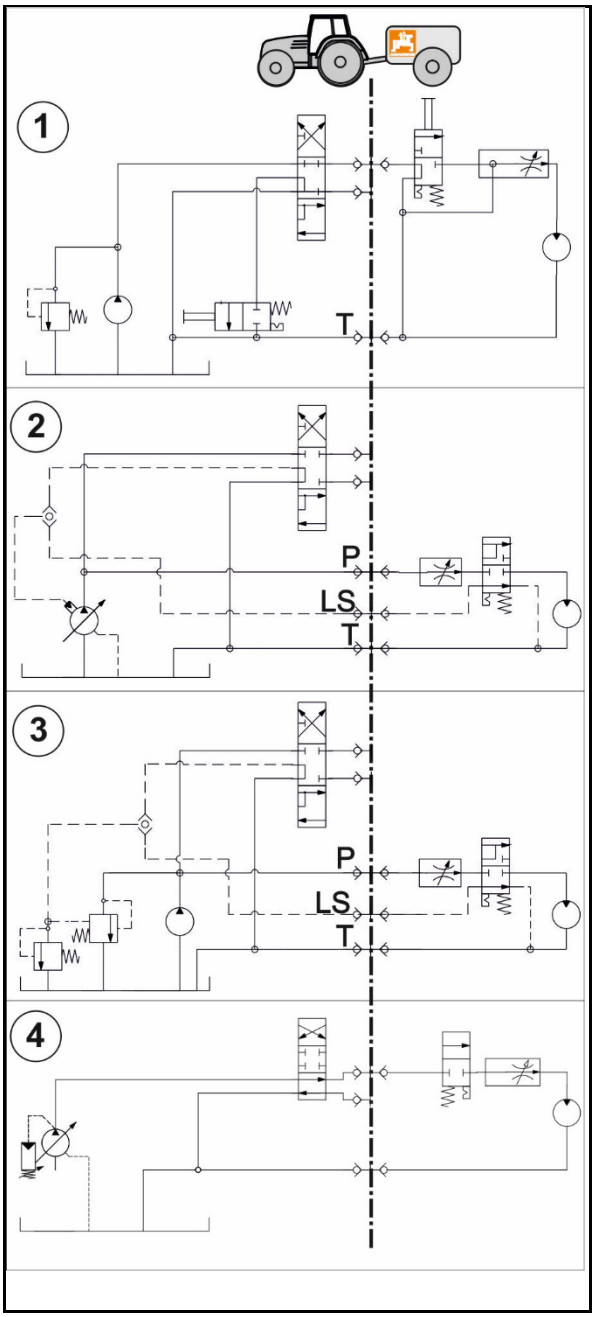

8 Coupling and uncoupling the machine

WARNING

Risk of crushing between the rear of the tractor and the machine when coupling and uncoupling the machine.

Only actuate the operator controls for the tractor's three-point linkage

- from the intended workstation.
- if you are outside of the danger area between the tractor and the machine.

8.1 Coupling the machine

WARNING

Risk of breaking during operation, insufficient stability and insufficient tractor steering and braking power from improper use of the tractor.

You may only connect the machine to tractors suitable for this purpose. Refer to the section "Checking the suitability of the tractor", page 118.

WARNING

Risk of crushing when coupling the machine and standing between the tractor and the machine.

Instruct people to leave the danger area between the tractor and the machine before you approach the machine.

Any helpers may only act as guides standing next to the tractor and the machine, and may only move between the vehicles when both are at a standstill.

WARNING

Risk of crushing, being caught or pulled in, or impact when the machine is unexpectedly released from the tractor.

- Use the intended equipment to connect the tractor and the machine in the proper way.
- When coupling the machine to the tractor's three-point hydraulic system, ensure that the attachment categories of the tractor and the machine are the same.

  Be absolutely certain to upgrade the machine's category II lower link pin to category III using reducing sleeves if your tractor has a category III three-point linkage.
- Only use the upper and lower link pins provided to couple up the machine (original pins).
- Check the upper and lower link pins for visible defects whenever the machine is coupled. Replace the upper and lower link pins in the event of clearly visible wear.
- Secure the upper link pin and lower link pin in the attachment points of the three-point attachment frame against unintentional detachment using a linchpin.
- Perform a visual inspection to ensure that the upper and lower link hooks are correctly locked before reversing the tractor.

WARNING

Risk of energy supply failure between the tractor and the machine due to damaged power supply lines.

During coupling, check the course of the power supply lines. The power supply lines

- must give slightly to all movement of the connected machine without tensioning, kinking or rubbing.
- must not chafe against other parts.

WARNING

Risk of injury or even death

Before working on the implement, secure the tractor and the implement against unintentional starting and rolling away, see page 125.

CAUTION

Risk of collision of the parking device with the tractor wheel.

Before starting off, check that there is enough space between the tractor and the implement in all mounting positions.

The parking wheel must always be able to turn freely.

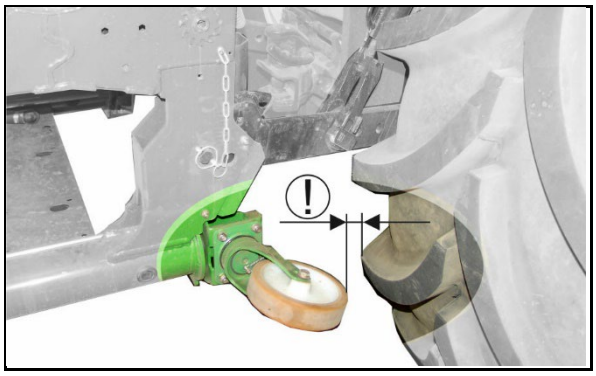

1. Set the tractor lower links to the same height.
2. Fasten and secure the ball sleeves in the coupling points of the 3-point hitch.
3. Drive the tractor towards the implement such that enough space remains between the tractor and implement to couple the supply lines.

Couple the hydraulic hose lines in the specified sequence.

4. Close stop tap (1).
5. To depressurize the oil return T, open stop tap (2) for 3 seconds.
6. Couple oil return T.
7. Open stop tap (1).
8. Couple pressure line P and control line LS.
9. Couple other supply lines.

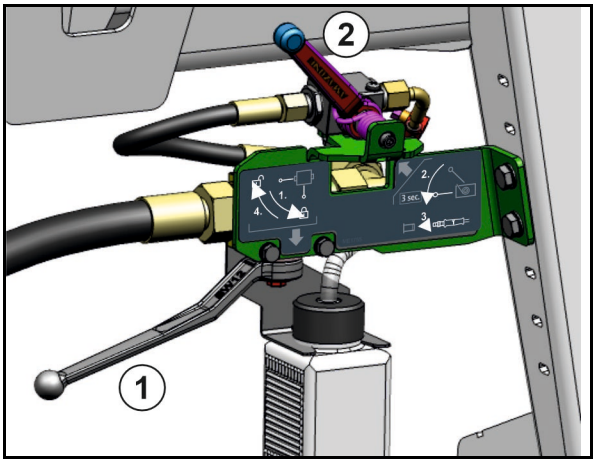

10. Couple universal joint shaft.
11. Move the tractor towards the implement.
12. Couple the lower links from the tractor seat.
13. Couple the top link from the tractor seat.
14. Check to ensure that top hook hook and lower link hook are correctly locked.
15. Lift the implement into transport position.
16. Change the length of the top link such that the boom carrier is perpendicular to the mounted sprayer.
17. Bring the parking supports into transport position.

8.1.1 Coupling implements with quick coupling system

DANGER

Risk of accident through detachment of the top-link connection.

Before driving, perform a visual inspection of the top link connection.

When the implement is parked and lifted to the maximum limit, mounting parts of the top link should not collide with the quick-coupling system.

CAUTION

Damage to the implement during coupling.

When using the quick coupling system, the top link for normal three-point mounting may not be installed!

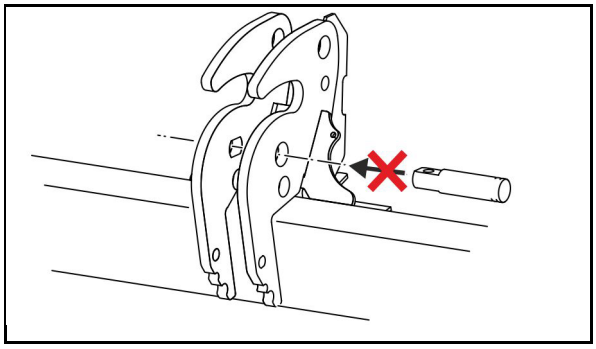

DANGER

Risk of accident due to releasing of the top link connection.

The top link can be released from the implement while driving if the parking system is not lifted into transport position.

The lifted front left parking support / transport roller locks the quick-coupling system.

Before departure, check the transport position of the parking system.

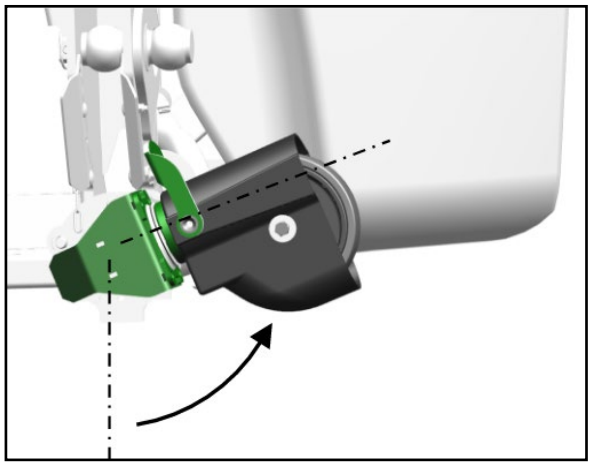

Determine the optimal top link length before coupling the implement on the tractor.

- The locked top link pin must be precisely above the lower link pin to be able to couple the tractor lower links.
- The raised implement in working position must be standing vertically.

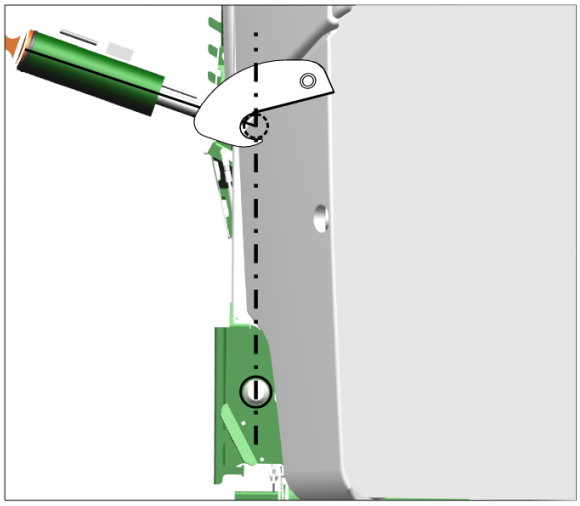

1. Set the tractor lower links to the same height.
2. Fasten and secure the ball sleeves in the coupling points of the 3-point hitch.
3. Drive the tractor towards the implement so that the unlocked system can catch the top link.
4. Couple the top link on the implement side.
5. Couple the supply lines.
6. Couple the universal joint shaft.
7. Lift the hand lever for later locking of the safety latch.

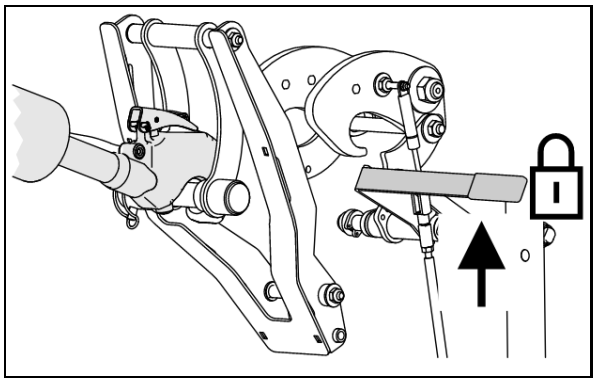

8. Drive the tractor towards the implement until the coupling system locks the top link with the latch.

→ The pointer points to the front when the top link pin is locked.

9. Couple the lower links from the tractor seat.
10. Lift the implement into transport position.

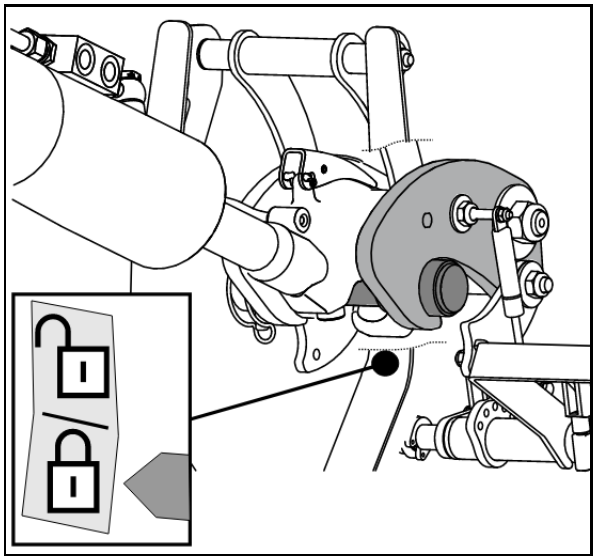

11. Move the parking supports into transport position and verify the transport position.

→ The safety shackle secures and locks the top link to the rear.

12. Check that the coupling system locks the top link to the front and rear.

13. Using the spirit level, check the vertical position of the implement in working position.

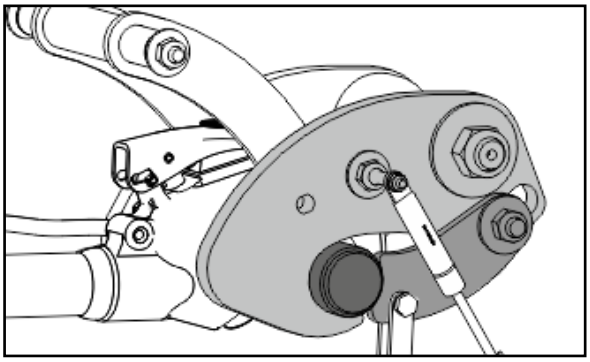

8.2 Uncoupling the machine

WARNING

Danger due to tipping over of the uncoupled implement.

- Move the parking supports into support position before you uncouple the implement.
- Always set down the uncoupled implement with an empty hopper on a level surface with solid ground.

WARNING

Risk of injury or even death

- Instruct persons away from the danger area between the tractor and the implement. Guides and helpers may only stand beside the tractor and the implement.
- Before working on the implement, secure the tractor and the implement against unintentional starting and rolling away, see page 125.

1. Move the parking supports into parking position.
2. Park the implement on a level surface with solid ground.
3. Release the top link.
4. Uncouple the top link from the implement from the tractor seat.
5. Release the lower links.
6. Uncouple the lower links from the implement from the tractor seat.
7. Drive the tractor forward so that the supply lines can be uncoupled.
8. Uncouple the supply lines and protect them against soiling with protective caps.
9. Uncouple the universal joint shaft.

8.2.1 Uncoupling implements with quick coupling system

The parking supports must be in parking position to be able to uncouple the implement from the tractor.

1. Lower the hand lever to unlock the safety latch.
2. Move the parking supports into parking position.

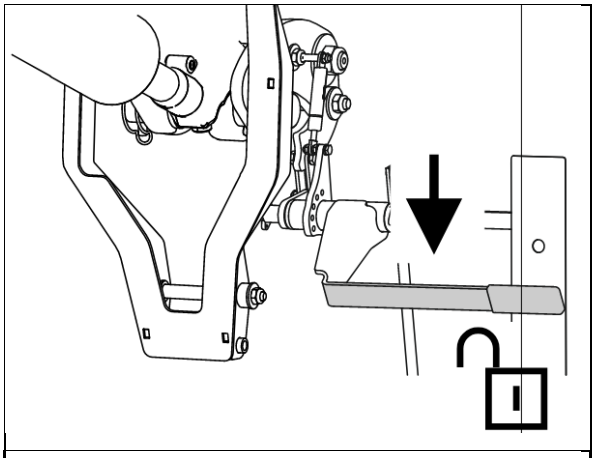

→ The safety latch unlocks the top link to the rear.

3. Park the implement on a level surface with solid ground.

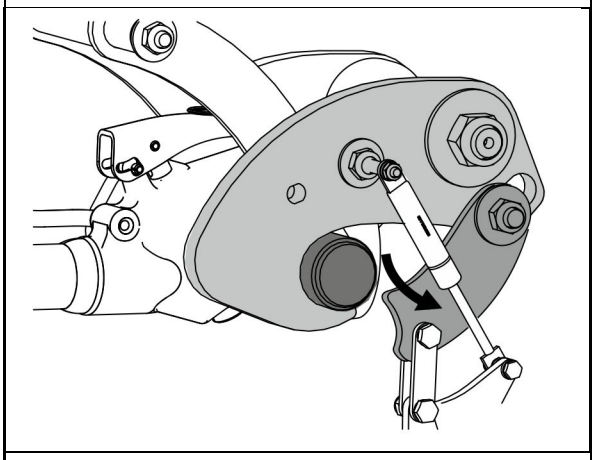

4. If the coupling system does not automatically release the top link, drive back a bit with the tractor.
5. Release the lower links.
6. Uncouple the lower links from the implement from the tractor seat.

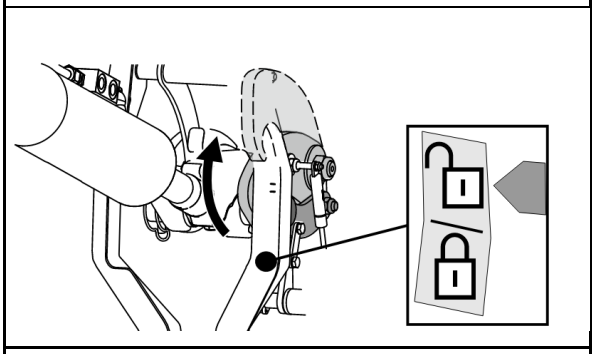

7. Drive the tractor forwards

- as far as possible with the coupled top link (maximum 450 mm).
- so that the supply lines can be uncoupled.

8. Uncouple the universal joint shaft.
9. Uncouple the supply line.
10. Uncouple the top link.

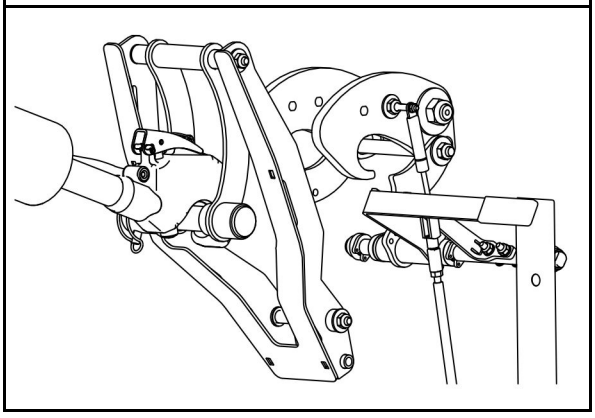

11. Raise the hand lever again.

9 Transportation

WARNING

Risk of crushing, cutting, being caught and/or drawn in, or impact through unintentional releasing of the coupled machine.

Carry out a visual check that the upper and lower link pins are firmly fixed with the linchpin against unintentional release.

WARNING

Risk of crushing, shearing, cutting, being caught and/or drawn in, or impact when making interventions in the machine, through unintentional machine movements.

- On foldable machines, check that the transport locks are correctly locked.
- Secure the machine against unintentional movements before starting transportation.

WARNING

Risk of crushing, cutting, being caught and/or drawn in, or impact from tipping and insufficient stability.

- Drive in such a way that you always have full control over the tractor with the attached machine.

  In so doing, take your personal abilities into account, as well as the road, traffic, visibility and weather conditions, the driving characteristics of the tractor and the connected machine.
- Before transportation, fasten the side locking device of the tractor lower link, so that the connected or coupled machine cannot swing back and forth.

WARNING

Risk of breaking during operation, insufficient stability and insufficient tractor steering and braking power from improper use of the tractor.

These risks pose serious injuries or death.

Comply with the maximum load of the connected machine and the permissible axle and drawbar loads of the tractor. If necessary, drive only with a partially filled tank.

WARNING

Risk of falling when riding on the machine, contrary to instructions.

It is forbidden to ride on the machine and/or climb the machine while it is running.

Instruct people to leave the loading site before approaching the machine.

The tractor headlights are covered when using the front tank!

If roof headlights are used instead, the transport speed may be maximum 30 km/h.

CAUTION

- Move the sprayer boom to the transport position and secure mechanically.

→ If a working width reduction of the outer elements is mounted, unfold it for transporting purposes.

- Use the transport locking mechanism to secure the swivelled-up induction bowl in transport position against unintentional swivelling down.
- Use the transport locking mechanism to lock the raised ladder against unintentional folding down.
- If a boom extension is installed, move it into the transport position
- Switch the work lights off during transport to avoid blinding other motorists.

10 TwinTerminal for Comfort Package on the control panel

The suction side selector valve is electrically switched using the TwinTerminal.

Standard screen of the TwinTerminal:

- Display of the spray liquid tank fill level and agitation level
- Display of the flushing water tank fill level.

4 buttons are available for operation.

When switching on the implement, per default the suction side in in position:

- Suction from the spray liquid tank

→ Spraying operation

The suction valve chest can be switched via the TwinTerminal:

As a result, in addition to spraying operation, other functions can be selected via the TwinTerminal (depending on the implement and equipment):

- Filling via suction connection or pressure connection
- Suction from flushing water tank (cleaning and dilution)

Other functions of the TwinTerminal:

- Adjusting the agitator
- Circulation cleaning
- Cleaning the pressure filter when the spray liquid tank is full

TwinTerminal diagram

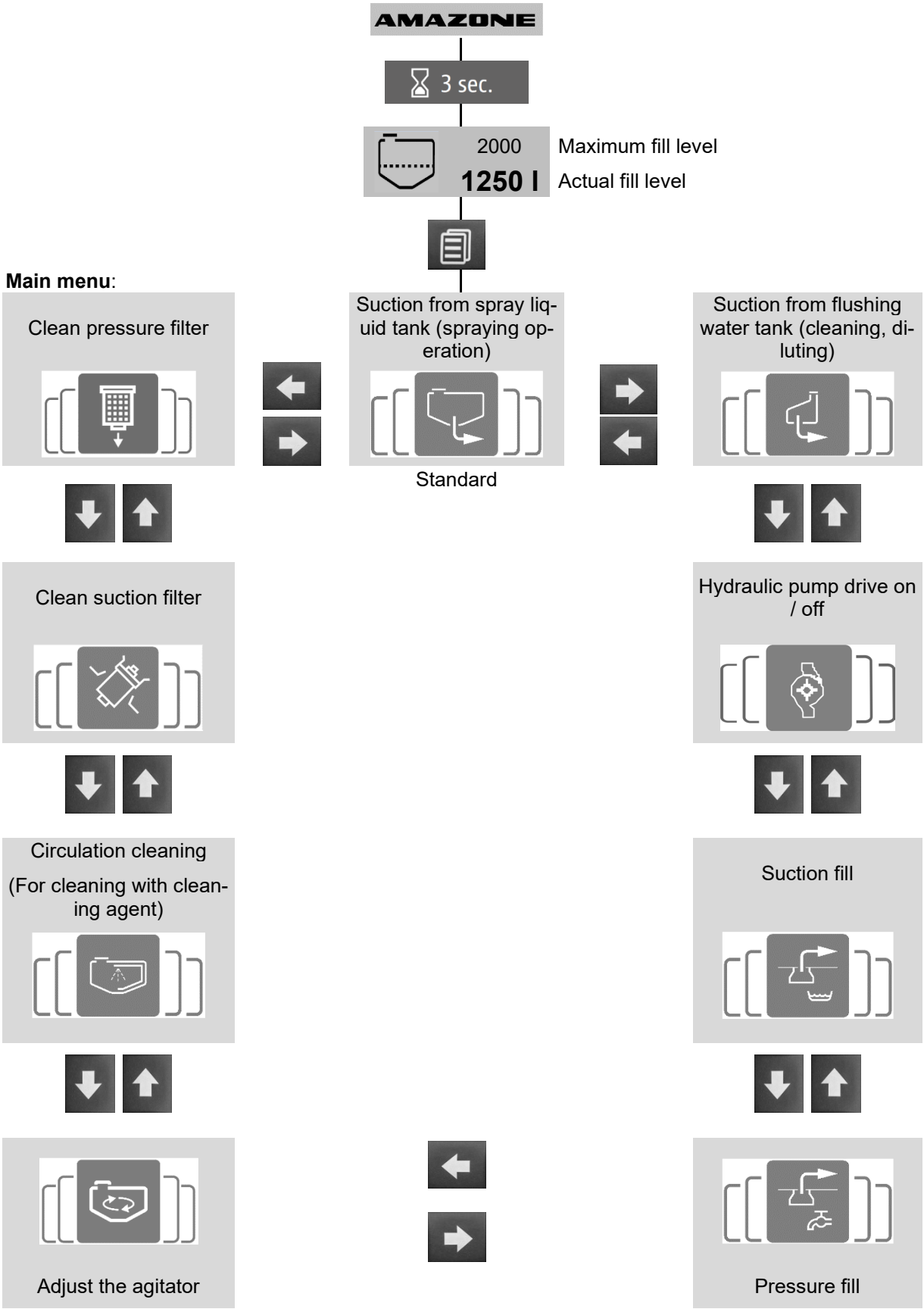

Buttons in the Main menu

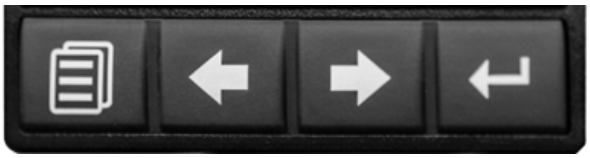

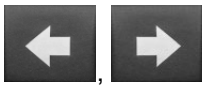 , Select functions in the Main menu.

Start / stop function

Go to the start screen

Buttons in the Setting menu

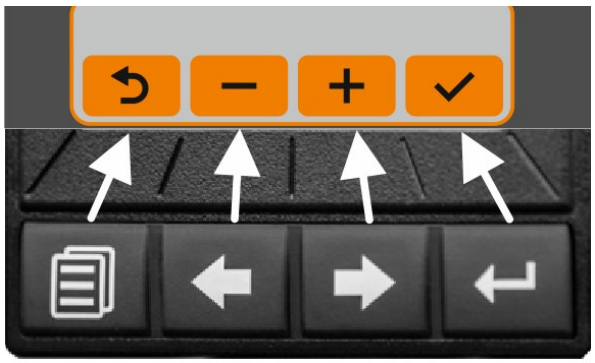

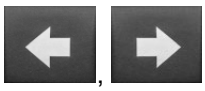 , Increase / reduce values.

Confirm entry

Back

11 Using the machine

When using the machine, observe the information in the following sections:

- "Warning symbols and other labels on the machine" starting on page 18 and
- "Safety information for the user", starting on page 29 ff.

Observing this information is important for your safety.

Observe the separate operating manual for the control terminal and the implement control software.

WARNING

Risk of injury due to accidental movement of the sprayer boom in automatic mode when entering the radiation area of the ultrasound sensor.

Lock the sprayer boom →
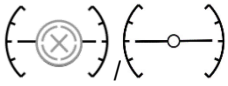

- Before leaving the tractor.
- If unauthorised persons are standing in the area of the sprayer boom.

DANGER

Fatal injury due to electric shock if the sprayer boom comes into contact with overhead power lines.

If poles, hedges or other objects on the field are in the detection area of the sensor for automatic boom guidance, the sprayer boom can unintentionally swing upward and hit overhead power lines.

Switch the automatic boom guidance off in these areas.

WARNING

Risk of breaking during operation, insufficient stability and insufficient tractor steering and braking power from improper use of the tractor.

Observe information on the maximum load of the coupled machine and the permissible axle and drawbar loads of the tractor. If necessary, drive only with a partially filled tank.

WARNING

Risk of crushing, cutting, being caught and/or drawn in, or impact through insufficient stability and tipping of the tractor and/or the connected machine.

Drive in such a way that you always have full control over the tractor and the attached machine.

In so doing, take your own abilities into account, as well as the road, traffic, visibility and weather conditions, the driving characteristics of the tractor and the coupled machine.

WARNING

Risk of crushing, cutting, being caught and/or drawn in, or impact through unintentional releasing of the coupled machine.

Before machine use, carry out a visual check that the upper and lower link pins are firmly fixed with the linchpin against unintentional release.

WARNING

Risk of crushing, shearing, cutting, being caught and/or drawn in, trapping or impact through

- **unintentional falling of raised, unsecured machine parts.**
- **unintentional start-up and rolling of the tractor-machine combination.**

Secure the tractor and the machine against unintentional start-up and rolling before eliminating faults on the machine. See page 125.

Wait for the machine to stop before entering the machine danger area.

WARNING

Danger for the operator or third parties from damaged components being ejected due to impermissibly high drive speeds of the tractor universal joint shaft.

Observe the permissible machine drive speed before switching on the tractor universal joint shaft.

WARNING

Risk of being caught and drawn in and danger from foreign objects being caught and thrown out in the danger area of the driven PTO shaft.

- Whenever the machine is used, first check to ensure that the safety devices and guards of the PTO shaft are fully intact and functional.

  Have damaged safety devices and guards of the PTO shaft replaced immediately by a specialist workshop.
- Check that the PTO shaft guard is secured against rotation by the supporting chain.
- Maintain a sufficient safety clearance between you and the driven PTO shaft.
- Direct people out of the danger area of the driven PTO shaft.
- Shut down the tractor engine immediately in case of danger.

WARNING

Risk of accidental contact with crop protection agents / spray liquid.

- Wear personal protective equipment
  - when preparing the spray liquid.
  - when cleaning / replacing the spraying nozzles during spraying operation.
  - for all cleaning work carried out on the field sprayer after spraying operation.
- When wearing the required protective clothing, always observe the manufacturer's instructions, the product information, the user manual, the safety datasheet or the operating manual for the crop protection agent to be used. For example, use:
  - Chemical-resistant gloves
  - Chemical-resistant overalls
  - Water-resistant footwear
  - A face mask
  - Breathing apparatus
  - Safety glasses
  - Skin protection agents, etc.

WARNING

Risk to health from accidental contact with crop protection agents or spray liquid.

- Put on protective gloves before
  - using crop protection agent,
  - carrying out work on a contaminated field sprayer or
  - cleaning the field sprayer.
- Wash the gloves with clear fresh water from the fresh water tank
  - immediately after contact with crop protection agent.
  - before removing the gloves.

11.1 Preparing for spraying operation

- The field sprayer must be operating properly in order to guarantee correct application of the crop protection agent. Have the field sprayer tested regularly on a test rig. Rectify any deficiencies immediately.
- Make sure of using the correct filter equipment.
- Clean the field sprayer thoroughly before spreading a different crop protection agent.
- Flush the nozzle line before:
  - each time changing a nozzle.
  - before rotating the multiple-nozzle head to another nozzle.

  See the section on "Cleaning", page 191
- Fill the flushing water tank and the clear water tank.

11.2 Preparing the spray liquid

Prepare the spray liquid with the TwinTerminal on the control panel.

WARNING

Risk of accidental contact with crop protection agent and/or spray liquid.

- Always induct the crop protection agent into the spray liquid tank using the induction bowl.
- Swivel the induction bowl into the filling position before pouring in crop protection agent.
- Observe the safety regulations on physical protective equipment and breathing apparatus for use when handling crop protection agent and preparing the spray liquid, in the instructions for use of the crop protection agent.
- Do not prepare the spray liquid in the vicinity of wells or surface water.
- Avoid leaks and contamination with crop protection agent and/or spray liquid through appropriate conduct and wearing appropriate physical protection equipment.
- To avert risks to third parties, do not leave the prepared spray liquid, unused crop protection agent or used crop protection agent canisters and the uncleaned field sprayer unattended.
- Protect contaminated crop protection agent canisters and the contaminated field sprayer from precipitation.
- During and after preparing the spray liquid, ensure sufficient cleanliness in order that risks may be kept as low as possible (e.g. thoroughly wash used gloves before removing them and dispose of the washing water and cleaning fluid in the proper manner).

- The prescribed water and agent spray rate can be found in the directions for use for the crop protection agent.
- Read the directions for use for the agents and observe the specified precautions.

WARNING

Danger for people and animals from accidental contact with spray liquid while filling of the spray liquid tank is underway.

- Wear personal protective equipment when handling crop protection agent / dumping spray liquid from the spray liquid tank. The type of personal protective equipment required depends on the manufacturer's instructions, the product information, the directions for use, the safety datasheet or the user manual for the crop protection agent in question.
- Never leave the field sprayer unattended during filling.
  - Never fill the spray liquid tank beyond the nominal volume.
  - When filling the spray liquid tank, never exceed the permissible load of the field sprayer. Pay attention to the respective specific weight of the liquid in question.
  - During filling, always watch the fill level indicator to avoid overfilling the spray liquid tank.
  - Pay particular attention while filling the spray liquid tank to sealed surfaces; no spray liquid may be allowed to get into the sewerage system.
- Check the field sprayer before each filling for damage, e.g. for leaking tanks and hoses, as well as for the correct positioning of all control elements.

During filling, pay attention to the permissible load capacity for your field sprayer. Always take into account, when filling your field sprayer, the differing specific weights [kg/l] for individual liquids.

Specific weights of different liquids

Liquid	Water	Urea	AUS	NP solution
Density [kg/l]	**1**	**1.11**	**1.28**	**1.38**

Control terminal:

In the **control terminal**, call up the filling display from the Job menu.

TwinTerminal:

Perform working by using the TwinTerminal on the control panel .

Control terminal ISOBUS:

Perform with the control terminal during operating the implement on the field.

- As it is difficult to dispose of residues in an environmentally-friendly manner, carefully calculate the required filling quantity or re-fill quantity to avoid leaving any residue at the end of spraying operation.
  - To calculate the required re-fill quantity for topping up the spray liquid tank, use the "Filling table for remaining spray area". To do this, subtract the technical, undiluted residue in the sprayer boom from the calculated re-fill quantity.

    Refer to the section "Filling table for remaining areas"

Procedure

1. Determine the required water and agent spray rate by consulting the directions for use for the crop protection agent.
2. Calculate the filling quantity or re-fill quantity for the area to be treated.
3. Fill the machine and blend in the agent.
4. Agitate the spray liquid before commencing spraying operation, in accordance with the instructions of the spraying agent manufacturer.

Fill the machine preferably using a suction hose and blend in the agent while filling.

The induction area is thereby flushed with water constantly.

- During the filling process, start blending in the agent once the tank filling level has reached more than 20%.
- When using more than one agent:
  - Clean the canister immediately after each induction of an agent.
  - Flush the induction port after each induction of an agent.

- When filling, no foam must escape from the spray liquid tank.

  The addition of a froth-inhibiting agent also prevents the spray liquid tank from frothing over.

The agitators normally remain switched on from the initial filling to the end of the spraying operation. The instructions of the agent manufacturer, however, have priority.

- With the agitator running, feed the water-soluble plastic film bag directly into the spray liquid tank.
- Before spraying, fully dissolve the urea by circulating the liquid. When dissolving large quantities of urea, the temperature of the spray liquid falls more sharply; the urea consequently dissolves more slowly. The warmer the water, the faster and more completely the urea can dissolve.

- Carefully wash the empty agent canisters, render them unusable, collect and dispose of them in a proper manner. Do not reuse them for other purposes.
- If only spray liquid is available for washing the agent canisters, first use this to carry out preliminary cleaning. Then wash them meticulously when clear fresh water is available, e.g. before preparing the next load for the spray liquid tank or when diluting the residue from the last load.
- Carefully wash out the empty agent tank (e.g. using canister flushing) and add the flushing water to the spray liquid!

High degrees of water hardness above 15° dH (German degrees of hardness) can lead to lime deposits, which may impede the functioning of the implement and must be removed at regular intervals.

11.2.1 Calculating the filling and re-fill quantity

To calculate the required re-fill quantity for final filling of the spray liquid tank use the "Filling table for remaining spray area", on page 151.9

Example 1:

The following are given:

Tank nominal volume	**317 gal**	1,200 l
Residue in the tank	**0**	0 l
Water consumption	**43 gal/ac**	400 l/ha
Agent required per ha		
Agent A	**3.3 lb**	1.5 kg
Agent B	**0.264 gal**	1.0 l

Question:

How many litres of water, how many kg of Agent A and how many litres of Agent B must be used to treat a surface of 2.5 ha in area?

Answer:

Water:	**43 gal/ac**	**x**	**7,4 ac**	**=**	**318 gal**
	400 l/ha	x	3 ha	=	1200 l
Agent A	**1.3 lb/ac**	**x**	**7,4 ac**	**=**	**9,6 lb**
	1.5 kg/ha	x	3 ha	=	4.5 kg
Agent B	**0.106 gal/ac**	**x**	**7,4 ac**	**=**	**0,8 gal**
	1.0 l/ha	x	3 ha	=	3 l

Example 2:

The following are given:

Tank nominal volume	**317 gal**	1200 l
Residue in the tank	**53 gal**	200 l
Water consumption	**53 gal/ac**	500 l/ha
Recommended concentration	**0.15 %**	0.15 %

Question 1:

How many litres or kg of agent are needed to fill the tank?

Question 2:

How large is the area to be treated in ha if a residue of 5,3 gal / 20 l remains in the tank after spraying?

Formula and answer to Question 1:

$$\frac{\text{Refill amount of water gal [l] x Concentration [\%]}}{100} = \text{Addition of agent gal or lb [l or kg]}$$

$$\frac{\mathbf{(317 - 53) \times 0.15}}{\mathbf{100}} = \mathbf{0{,}396\ [gal\ or\ lb]}$$

$$\frac{(1{,}200 - 200) \times 0.15}{100} = 1.5\ [l\ or\ kg]$$

Formula and answer to Question 2:

$$\frac{\text{Quantity of liquid available gal [l] – Residue [l]}}{\text{Water consumption gal/ac [l/ha]}} = \text{Area to be treated [ha]}$$

$$\frac{\mathbf{317\ gal\ (Tank\ nominal\ volume) - 5{,}3\ gal\ (Residue)}}{\mathbf{53\ gal/ac\ Water\ consumption}} = \mathbf{4{,}98\ ac}$$

$$\frac{1{,}200\ l\ (\text{Tank nominal volume}) - 20\ l\ (\text{Residue})}{500\ l/ha\ \text{Water consumption}} = 2.36\ ha$$

11.2.2 Filling table for remaining spray area

- The specified re-fill quantities apply for an application rate of 100 l/ha. For other application rates, the re-fill quantity increases by a multiple.
- Take account of the residual quantity in the boom.

Distance traveled [ft]	With a working width of [ft]													
	15	16	18	20	21	24	27	28	30	32	33	36	39	40
	Refill quantities [gal] for sprayer booms													
33	0,5	0,5	0,5	0,5	0,5	0,5	0,5	1	1	1	1	1	1	1
66	1	1	1	1	1	1	1	2	2	2	2	2	2	2
98	2	2	2	2	2	2	2	2	2	3	3	3	3	3
131	2	3	3	3	3	3	3	3	3	3	3	4	4	4
164	3	3	3	3	3	3	4	4	4	4	4	5	5	5
197	3	3	3	3	3	4	4	4	5	5	5	6	6	6
230	3	3	3	4	4	4	5	5	6	6	6	7	7	7
262	3	3	4	4	4	5	6	6	6	7	7	8	8	8
295	4	4	4	5	5	6	6	7	7	8	8	8	10	10
328	4	4	5	5	6	6	7	7	8	8	9	10	11	11
656	8	8	10	11	11	13	14	15	16	17	17	19	21	21
984	12	13	14	16	17	19	21	22	24	25	26	29	32	32
1312	16	17	19	21	22	25	29	30	32	34	35	38	42	42
1640	20	21	24	26	28	32	36	37	40	42	44	48	53	53

Distance [m]	Working width [m]													
	15	16	18	20	21	24	27	28	30	32	33	36	39	40
	Re-fill quantities [l]													
10	2	2	2	2	2	2	3	3	3	3	3	4	4	4
20	3	3	4	4	4	5	5	6	6	6	7	7	8	8
30	5	5	5	6	6	7	8	8	9	10	10	11	11	12
40	6	7	7	8	8	10	11	11	12	13	13	14	15	16
50	8	8	9	10	11	12	14	14	15	16	17	18	19	20
60	9	10	11	12	13	14	16	17	18	19	20	22	23	24
70	11	11	13	14	15	17	19	20	21	22	23	25	27	28
80	12	13	14	16	17	19	22	22	24	26	26	29	30	32
90	14	15	16	18	19	22	24	25	27	29	30	32	34	36
100	15	16	18	20	21	24	27	28	30	32	33	36	38	40
200	30	32	36	40	42	48	54	56	60	64	66	72	74	80
300	45	48	54	60	63	72	81	84	90	96	99	108	114	120
400	60	64	72	80	84	96	108	112	120	128	132	144	152	160
500	75	80	90	100	105	120	135	140	150	160	165	180	190	200

11.3 Filling the spray liquid tank via the filling opening

11.3.1 TwinTerminal filling diagram

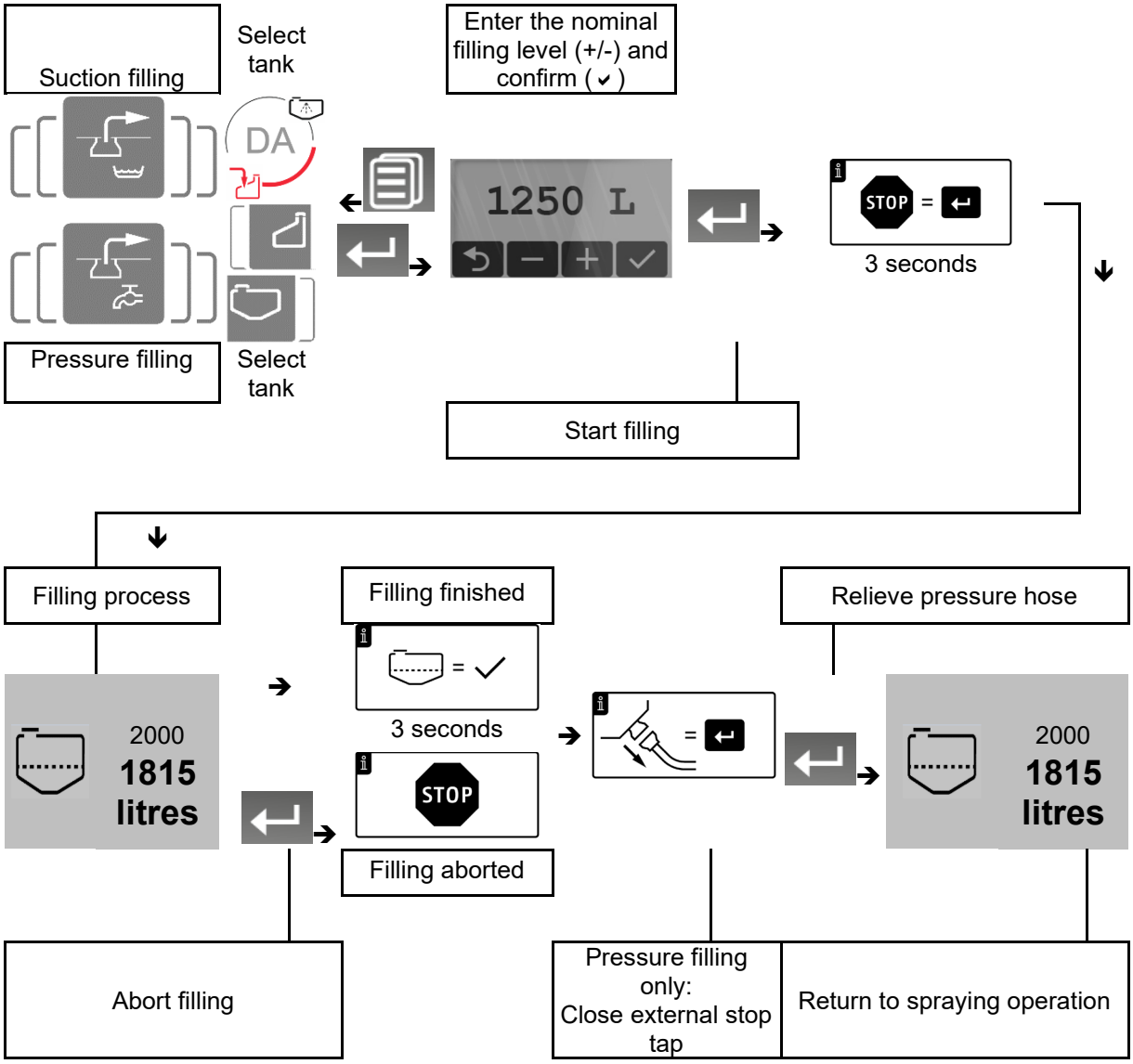

Only **FT** with FlowControl:

At a fill level of 95% in the spray liquid tank, the filling is paused until the front tank is full.

→ Filling of the flushing water tank must be finished!

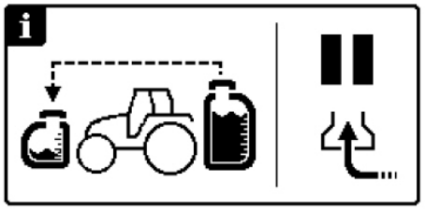

11.3.2 Filling the spray liquid tank via the suction port

Befüllen Sie vorzugsweise aus einem geeigneten Behälter und nicht aus offenen Wasserentnahmestellen.

Beachten Sie die Vorschriften bei der Befüllung des Spritzflüssigkeitstanks über den Saugschlauch aus offenen Wasser-Entnahmestellen.

To prevent pump damage during suction filling:

Ensure a continuous minimum diameter of the suction hoses / taps of 2 inches.

WARNING

Damage to the suction valve chest caused by pressure filling via the suction connection!

The suction connection is not suitable for pressure filling. This also applies for filling from a higher-elevation source.

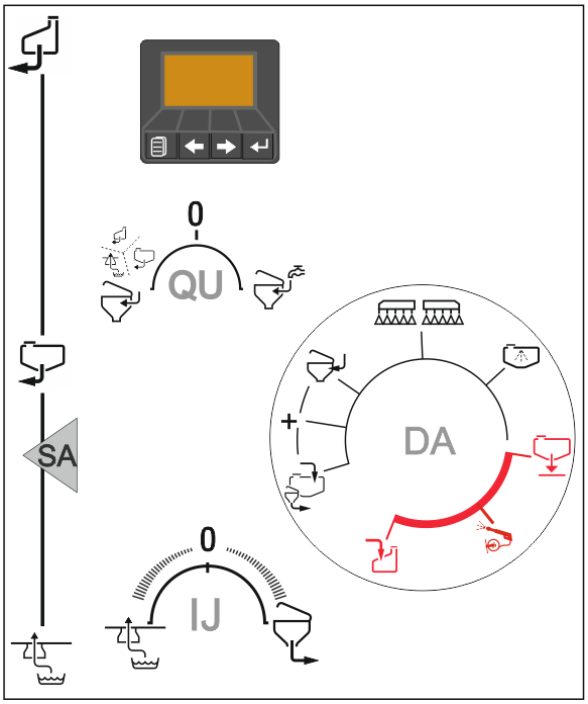

1. Determine the precise water filling quantity (see section "Calculating the filling or refill quantity",page on page 150).
2. Couple the suction hose with the suction connection and the water point.
3. Run the pump.
4. Pressure valve chest **DA** in position .
5. Switch tap **IJ** in position **0**.
6. TwinTerminal:

   6.2 Select suction filling .

   6.3 Enter the target fill level and confirm.

→ Suction valve chest **SA** in position .

→ Filling of the spray liquid tank stops automatically as soon as the nominal fill level has been reached.

7. Switch tap **IJ** in position .

→ Increasing the suction capacity by switching on the injector.

If necessary: simultaneous filling of the flushing water tank, see 156.

8. Flushing in the agents while filling, see page 159.

Interrupt the filling process if flushing is not possible before the nominal fill level is reached.

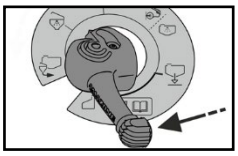

→ Lock the pressure valve chest.

(Not possible with FlowControl)

9. Shortly before the nominal fill level is reached:

   Switch tap **IJ** to position **0**.

When the tank is full:

10. If necessary: remove the suction hose from the extraction point so that the pump is able to suck up all remaining liquid in the suction hose.
11. Pressure valve chest **DA** in position .

- The injector may only be switched on after the pump has drawn in water.
- Do not use the injector with FlowControl.
- The water being drawn through the injector is not filtered through the suction filter.

Special function: fill the flushing water tank with the suction hose while filling the spray liquid tank.

WARNING

Contamination of the flushing water tank with spray agent when filling through the suction hose with the spraying pump.

The following sequence must be observed!

1. Clean the implement.
2. Fill the spray liquid tank with at least 160 gal / 600 l of water.

→ To clean the valve chest.

3. Completely fill the flushing water tank.

→ Due to the risk of contamination of the flushing water tank, in no case may the filling procedure be interrupted using the TwinTerminal ↵.

4. Flush in the agents and fill the spray liquid tank.

→ Due to the risk of contamination of the flushing water tank, the filling procedure for the flushing water tank may no longer be started.

WARNING

Damage to crops and soils due to critical agents during suction filling of the flushing water tank:

- Clean the implement thoroughly beforehand.
- Suction filling is forbidden if contamination of the flushing water tank with critical agents is to be expected.

→ First fill the spray liquid tank with 160 gal / 600 l to clean the valve chest.

1. Switch tap **IJ** in position **0**.
2. Pressure valve chest **DA**: select position .

→ Filling of the flushing water tank starts.

As soon as the flushing water tank is full (observe the fill level):

3. Pressure valve chest **DA**: select position .

→ Continue filling the spray liquid tank and flush in the agents.

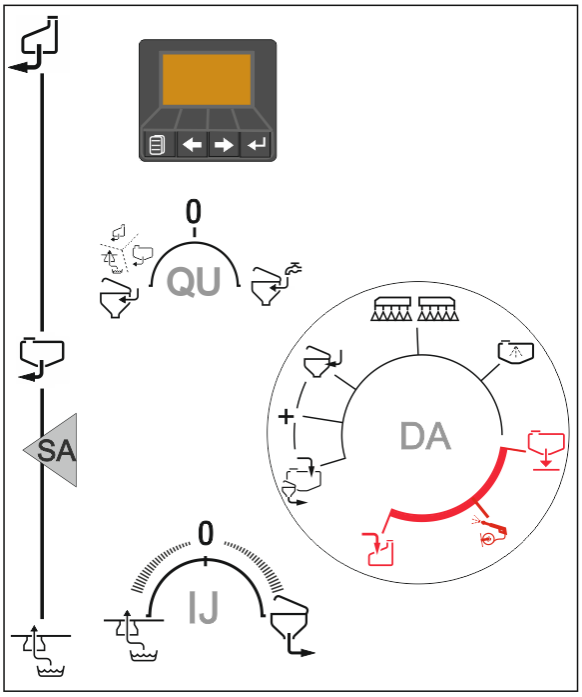

11.3.3 Filling the spray liquid tank through the pressure connection

CAUTION

- Maximum permitted water pressure: 116 psi / 8 bar
- At a filling capacity greater than 132 gpm / 500 l/min, keep the lid of the spray liquid tank open during the filling procedure.

Otherwise, the spray liquid tank can be damaged.

CAUTION

Risk of contaminating the pressure connection with spray liquid or liquid fertilizer

Do not fill with any pre-mixed spray liquid or liquid fertilizer via the pressure connection.

Only use the pressure connection for water

1. Determine the precise water filling quantity (see section "Calculating the filling or refill quantity", on page 150).
2. Couple the pressure hose with the pressure connection and the hydrant.
3. Switch tap **FD** in position
4. TwinTerminal:
   4.1 Select pressure filling .
   4.2 Enter the target fill level and confirm.

→ Filling of the spray liquid tank stops automatically as soon as the nominal fill level has been reached.

5. Flushing in the agents while filling, see page 159.
6. Interrupt the filling process if flushing is not possible before the nominal fill level is reached.

→ Switch tap **FD** in position **0**.

7. When the nominal fill level is reached:
   - Close the supply-side stop tap.
   - TwinTerminal: Relieve the pressure hose
   - Switch tap **FD** in position **0**.
   - Uncouple the hose from the filling connection.

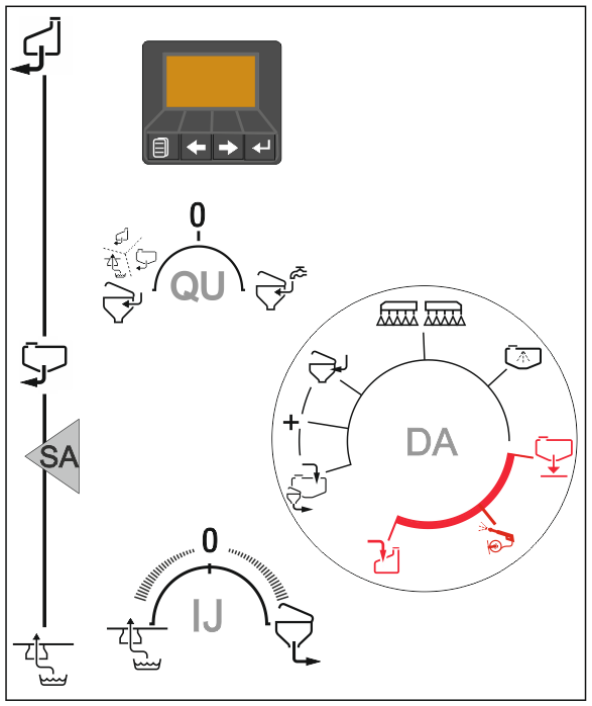

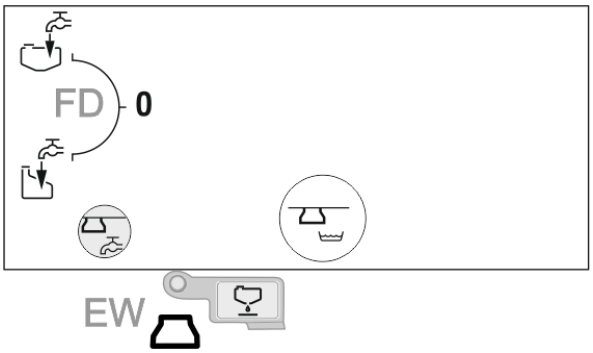

The hose is still filled with water.

11.3.4 Adjusting the agitator

Adjust the agitator before induction.

1. TwinTerminal: Select the agitator (see TwinTerminal diagram).
2. Select the desired agitation level and confirm.

→ The agitation level will be displayed on the TwinTerminal.

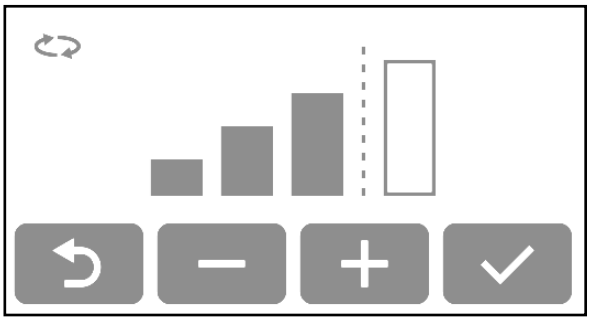

11.4 Flushing in the agents

DANGER

Risk of injury due to contact with spray agents and spray liquid.

Wear personal protective equipment.

During the filling process, flush the agents into the spray liquid tank through the induction bowl.

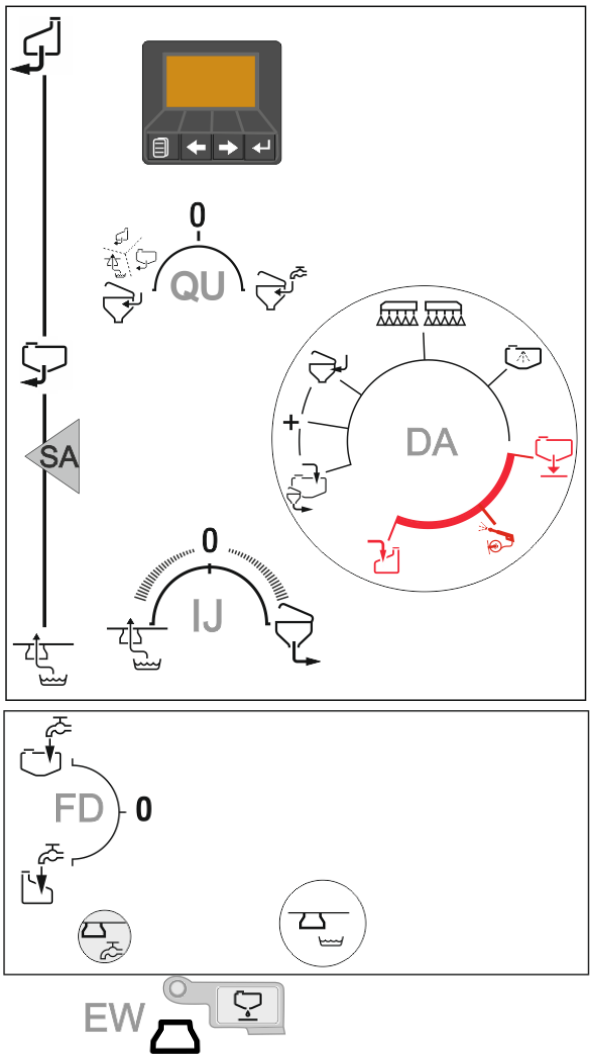

During the suction filling:

- TwinTerminal: Select .
- Pressure valve chest **DA** in position + .
- Switch tap **QU** in position .

During the pressure filling:

- TwinTerminal: Select .
- Pressure valve chest **DA** in position .
- Switch tap **QU** in position . (overfilling of the spray liquid tank possible via the induction bowl. Also for fill stop and switch tap FD at **0**).

After filling:

1. Pressure valve chest **DA** in position .
2. Then suction valve chest SA to position .
3. Switch tap **QU** in position .

Flush-in the agents during the filling process.

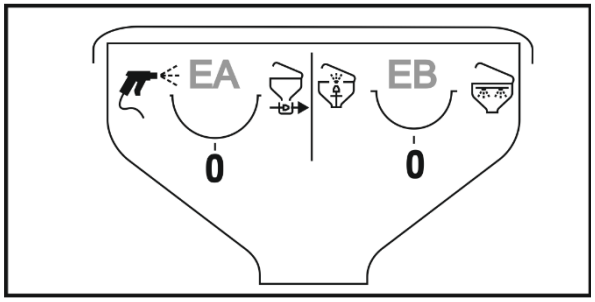

1. Drive the pump (at least 400 rpm).
2. Lower the induction bowl.
3. Open the induction bowl cover.
4. Sieve in the induction bowl:
   - o Use for liquid agents.
   - o Do not use for agents in powder form.
5. Switch tap **IJ** in position (suction intensity is adjustable).
6. Agents in powder form: switch tap **EA** in position .

   Liquid agents: switch tap **EB** in position .
7. Pour the quantity of agent calculated and measured for filling the tank into the induction bowl

(max. 16 gal / 60).

8. Close the induction bowl cover.

→ Draw the contents completely out of the induction bowl.

9. Switch tap **EB, EA** back in position **0**.

To increase user protection, for example when handling powder agents, first pour the agent into the induction bowl, close the cover and only then apply suction.

If it is not possible to flush in the agents before the target fill level in reached, interrupt the filling procedure.

Pressure valve chest **DA** in Position .

→ Not possible with FlowControl.

→ Avoid overfilling the induction bowl. Suction is interrupted.

→ If the target fill level is reached while flushing in, the induction bowl must be cleaned with flushing water.

Cleaning canisters

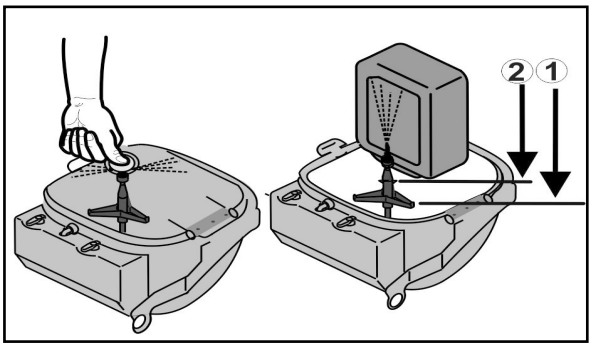

1. Switch tap **EB** in position .
2. Wash the canister or other containers using the canister flushing equipment. First position 1, then position 2.
3. Press the canister down for at least 30 secs.

→ The canister is rinsed with water.

Suction filling:

Pressure valve chest **DA**: Select position to increase the capacity of the canister rinsing.

Pressure filling:

Switch tap **FD**: Select position **0** to increase the capacity of the canister rinsing.

Cleaning the induction bowl

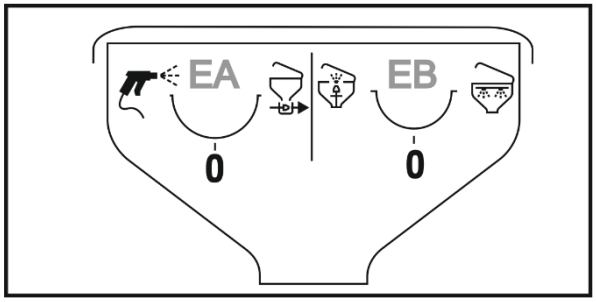

- Switch tap **EB** in position

→ Clean the induction bowl using the ring line.

- Switch tap **EA** in position .

→ Clean the surrounding area with the spray gun.

- Switch tap **EB** in position and actuate the push button with the induction bowl closed.

→ Internal cleaning with pressure nozzle

11.5 Spray agent suction from containers (closed transfer system)

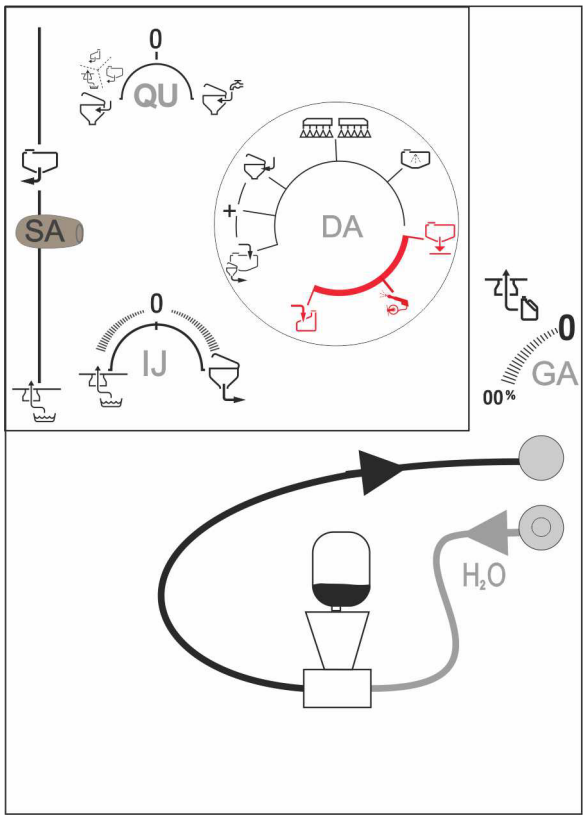

1. Run the pump.
2. Couple the spray agent container with a drip-free plug coupling.
3. Couple the flushing connection.
4. Switch tap QU in position

- Use liquid from the suction valve chest for the induction bowl
- Use filling water from the pressure connection for the induction bowl

5. TwinTerminal: select (Spray liquid suction).
   Alternative: suction during the suction filling.
6. Pressure valve chest **DA** in position .
7. Start suction using switch tap GA, adjust the intensity (0-100%).
8. Switch tap **GA** in position 0, when the desired quantity has been drawn from the container.

Cleaning contaminated components:

1. TwinTerminal: select (Flushing water suction).
2. Start suction using switch tap GA, adjust the intensity (0-100%).
3. Pressure valve chest DA in position + .
4. Pressure valve chest **DA** in position to terminate the cleaning.

TwinTerminal: select (Spray liquid suction).

5. Switch tap **GA** in position 0.

11.6 Filling the flushing water tank through the pressure connection

WARNING

Forbidden contamination of the fresh water tank with crop protection products or spray liquid!

Only fill the fresh water tank with clear fresh water, and never with crop protection product or spray liquid.

Ensure that you always carry enough clear fresh water when operating the field sprayer. Check and fill the fresh water tank when you fill the spray liquid tank.

Maximum permitted water pressure: 8 bar

1. Couple the pressure hose with the pressure connection.
2. Switch tap **FD** in position .

→ Filling starts.

3. Observe the fill level indicator during the filling process.
4. When the nominal fill level is reached:
   - 4.1 Close the supply-side stop tap.
   - 4.2 Switch tap **FD** in position **0**.
   - → Filling finished.
   - 4.3 Depressurize the pressure hose and uncouple it.

The hose is still filled with water.

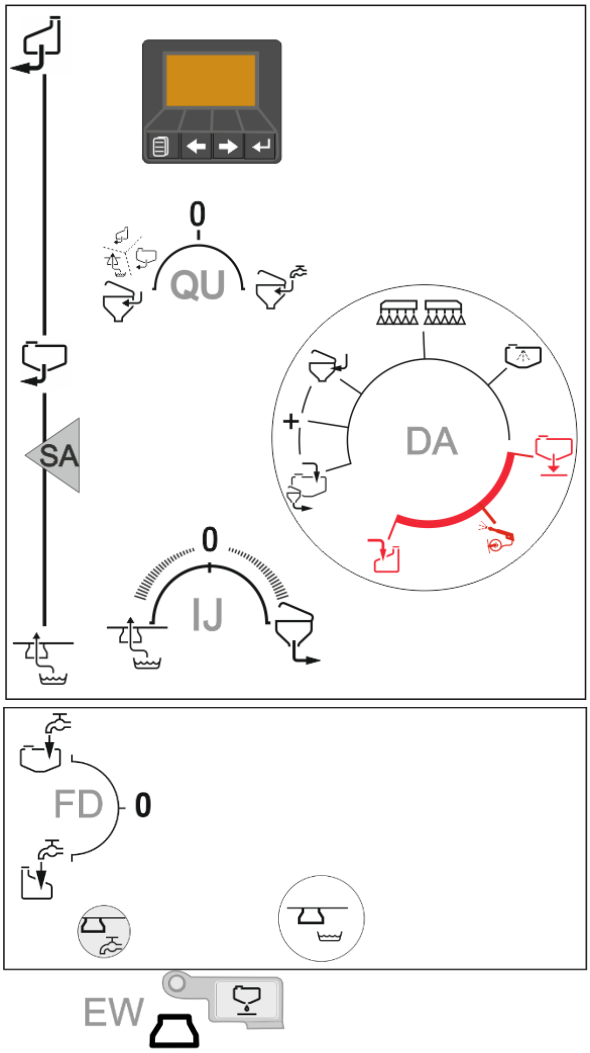

11.7 Spraying operation

Special instructions for spraying operation

- Test the field sprayer by carrying out calibration
  - before the start of the season.
  - in the case of deviations between the actual indicated spray pressure and the spray pressure prescribed in the spray table.
- Before commencing spraying operation, precisely determine the required spray rate with the help of the crop protection agent manufacturer's directions for use (refer to the section "Preparing the spray liquid", on page 146).
  - Before spraying commences, enter the required spray rate (target rate) into the operating terminal.
- During spraying operation, precisely adhere to the required spray rate [l/ha]
  - in order to achieve the best possible results from your crop protection measure.
  - to avoid unnecessary pollution of the environment.
- Select the required nozzle type from the spray table before spraying starts, taking account of
  - the intended operational speed,
  - the required spray rate and
  - the required atomisation characteristic (fine, medium or coarse-dropped) of the crop protection agent used for the crop protection measure.

    Refer to the section "Spray tables for flat-fan, anti-drift, injector and airmix nozzles", on page 228.
- Select the required nozzle size from the spray table before spraying starts, taking account of
  - the intended operational speed,
  - the required spray rate and
  - the target spray pressure.

    Refer to the section "Spray tables for flat-fan, anti-drift, injector and airmix nozzles", on page 228.
- Select a low operational speed and a low spray pressure to prevent wastage from drifting.

  Refer to the section "Spray tables for flat-fan, anti-drift, injector and airmix nozzles", on page 228.

- At wind speeds of 3 m/s, take additional drift reduction measures (refer to the section "Measures for drift reduction", on page 168.
- Even lateral distribution can only be achieved with the swing compensation unlocked.
- Refrain from use if average wind speeds top 5 m/s (leaves and thin twigs move).
- Only switch the sprayer boom on and off during travel to avoid the application of excessive doses.
- Avoid the application of excessive doses from overlapping caused by imprecise bout tracking from one spray path to the next and/or when cornering on the headland with the sprayer boom switched on.
- When increasing operational speed, make sure that the maximum permissible pump drive speed of 550 rpm is not exceeded.
- During spraying operation, constantly check actual spray liquid consumption with reference to the area treated.
- If spraying operation is interrupted due to bad weather, clean the suction filter, the pump, the valve chest and the spray lines. Refer to on page 182.

- Spray pressure and nozzle size influence drop size and the volume of liquid sprayed. The higher the spray pressure, the smaller the droplet diameter of the spray liquid. The smaller droplets are subject to increased, undesirable drifting.
- If the spray pressure is increased, the spray rate also increases.
- If the spray pressure is decreased, the spray rate also decreases.
- If the operational speed is increased while the nozzle size and spray pressure remain constant, the spray rate decreases.
- If the operational speed is decreased while the nozzle size and spray pressure remain constant, the spray rate increases.
- Operational speed and pump drive speed can be selected within broad limits, owing to the automatic, area-based spray rate control.
- The pump delivery capacity is dependent on the pump drive speed. Select the pump drive speed (between 400 and 550 rpm.) so that there is always an adequate flow rate to the sprayer boom and for the agitator. When making this choice, always take account of the fact that more spray liquid needs to be conveyed at higher operational speeds and higher spray rates.

- The agitator normally remains switched on from filling to the end of spraying operation. On this account, the instructions of the agent manufacturer are decisive.
- If there is a sudden significant drop-off in spray pressure, the spray liquid tank is empty.
- Residues in the spray liquid tank can be applied correctly up to a pressure drop of 25%.
- If the spray pressure drops off while conditions remain otherwise unaltered, the suction or pressure filter are blocked.

Special instructions for boom load

The permitted boom load may not be exceeded, as it can cause damage to the boom.

For low-stress driving, please observe the following instructions:

- Reduce the forward speed significantly before the headlands and drive in the curve at a constant speed.
- Drive tight curves at slow speeds (below 6 km/h).
- Avoid jerky steering or changes in directions when steering (e.g. track correction).
- Do not fold the boom while driving.
- Always put the individual boom elements in the completely folded end position (folded or unfolded). Do not drive with a partially folded boom.
- Avoid rapid and abrupt changes in direction.

11.7.1 Applying the spray liquid

1. Prepare and stir the spray liquid correctly in accordance with the instructions from the crop protection product manufacturer.
2. Pressure valve chest **DA** in position .
3. Suction valve chest **SA** in position .
4. Switch on the control terminal and check the settings.

→ Operate the field sprayer through the Work menu.

5. Fold out the sprayer boom.
6. Switch on boom guidance:

- DistanceControl
- ContourControl

Or activate the boom manually:

- Boom height, tilt adjustment

7. Drive the pump at the pump operating speed.

At low application rates, the pump speed can be reduced to save energy.

8. ON/OFF Switch on spraying operation through the control terminal.

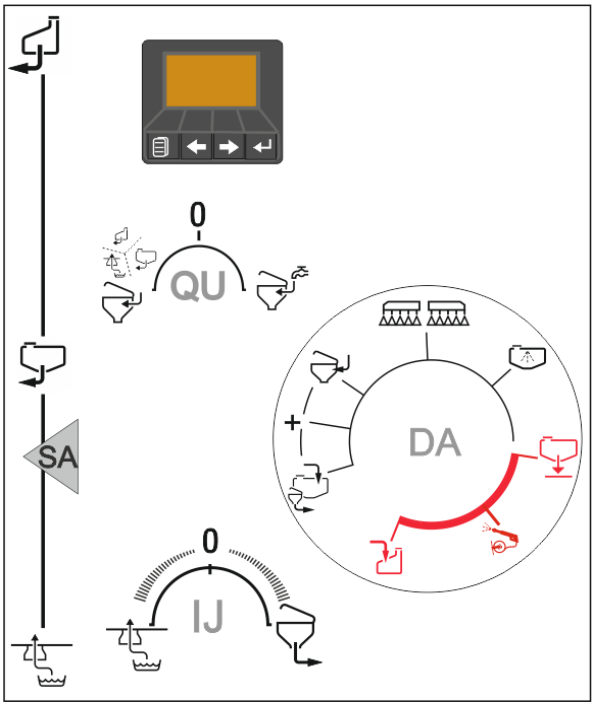

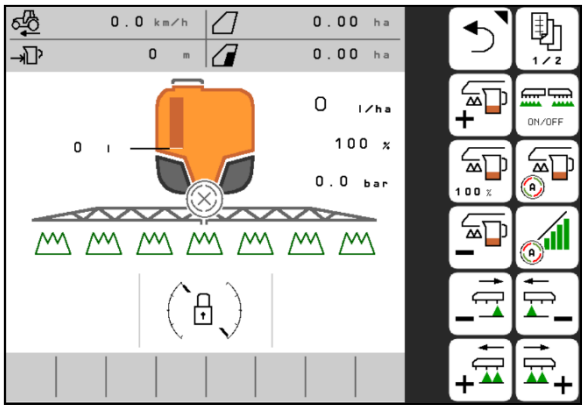

11.7.2 Driving to the field with the agitator switched on

1. Switch on the pump drive.
2. Control terminal: agitation menu, select Agitator intensity level.
3. Twin Terminal: To prevent deposits: start circulation cleaning.

11.7.3 Drift reduction measures

- Reschedule treatment for the early morning or the evening hours (there is generally less wind).
- Choose larger nozzles and a higher water spray rate.
- Reduce spray pressure.
- Precisely maintain the working height of the boom, because the risk of drifting rises very sharply as the distance between the nozzles increases.
- Reduce operational speed (to below 5 mph [8 km/h]).
- Use so-called anti-drift (AD) nozzles or injector (ID) nozzles (nozzles which produce a high proportion of coarse drops).
- Observe the distance requirements of the respective crop protection agent

11.7.4 Diluting the spray liquid with flushing water

1. Run the pump.

Control terminal, Cleaning menu:

2. Dilute the spray liquid with flushing water.
3. End dilution.

Observe the display for the required quantity of flushing water.

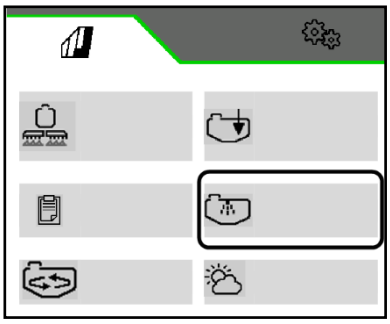

The spray agent can be diluted for 2 reasons:

- To get rid of excess residual quantities.

  Excess residual quantities in the spray liquid tank are initially diluted with 10 times the quantity of flushing water to then spray them out on the field that has already been treated.
- Increase the volume of spray liquid to treat a remaining area.

The spray line is flushed on machines with nozzle control. When restarting the spraying, two to five minutes will elapse until concentrated spray liquid can be applied.

11.7.5 Continual internal cleaning

With the continuous **internal cleaning**, the spray liquid tank is pre-cleaned before the actual cleaning procedure.

Towards the end of the application, the continuous internal cleaning can be switched on during spraying operation.

- Using a rocker switch
-

Using the ISOBUS control terminal

11.8 Residues

There are three types of residue:

- excessive residue remaining in the spray liquid tank when the spraying operation is finished

→ This excessive residue is discharged diluted or pumped-out and disposed of.

- the technical residue that remains in the spray liquid tank, the suction chest and the spray line when the spray pressure drops off by 25%

  The suction chest is composed of the suction filter, pump and pressure controller sub-assemblies. Observe the values for the technical residues given on page 109.

→ This technical residue is discharged diluted onto the field while cleaning the field sprayer.

- The final residue that remains in the spray liquid tank, the suction chest and the spray line after being cleaned with air discharge from the nozzles.

→ This final diluted residue is drained off after cleaning.

Disposing of residues

- Make sure that the residue in the spray line continues to be sprayed in an undiluted concentration. Always spray this residue on an untreated area. The distance needed to use up this undiluted residue can be found in the section "Technical Data - spray lines", page 109. The residue contained in the spray line is dependent on the sprayer boom working width.
- To spray out the spray liquid tank until it is empty, switch off the agitator when the residue in the spray liquid tank is only 5% of the nominal volume. When the agitator is switched on, the technical residue is higher than the specified values.
- Measures intended for the user's protection apply when emptying residues. Observe the instructions of the crop protection product manufacturer and wear suitable personal protective equipment.

Formula for calculating the required distance in [m] for spraying out the undiluted residue in the spray line

$$\textbf{Required distance ft [m]} = \frac{\textbf{Undiluted residue gal [l] x 10,000 ft}^2\textbf{/ac [m}^2\textbf{/ha]}}{\textbf{Spray rate gal/ac [l/ha] x working width ft [m]}}$$

11.8.1 Spraying out the diluted residual quantity at the end of spraying operations

1. Switch off sprayers on the control terminal.
2. Run the pump.
3. Dilute the residual quantity with 10 times the amount of flushing water.
4. Switch of the agitators.
5. Switch on sprayers on the control terminal.

→ If possible, first spray out the undiluted spray liquid from the spray line on an untreated remaining area.

→ Spray out the diluted residual quantity on the treated area.

→ Keep flushing the diluted residues until air escapes from the nozzles.

6. Switch off sprayers on the control terminal.
7. Cleaning the field sprayer.

When spreading residue, observe the maximum permissible application quantity of the agent on areas already treated.

11.8.2 Emptying the spray liquid tank using the pump

1. Couple a suitable emptying hose from the external tank to the implement-side emptying connection.
2. TwinTerminal: Select (Suction spray liquid).
3. Pressure valve chest **DA** in position .
4. Run the pump.

→ Emptying procedure starts.

5. After emptying, pressure valve chest **DA** in position .
6. Interrupt the pump drive.
7. Uncouple the hose.

The hose is still filled with spray liquid.

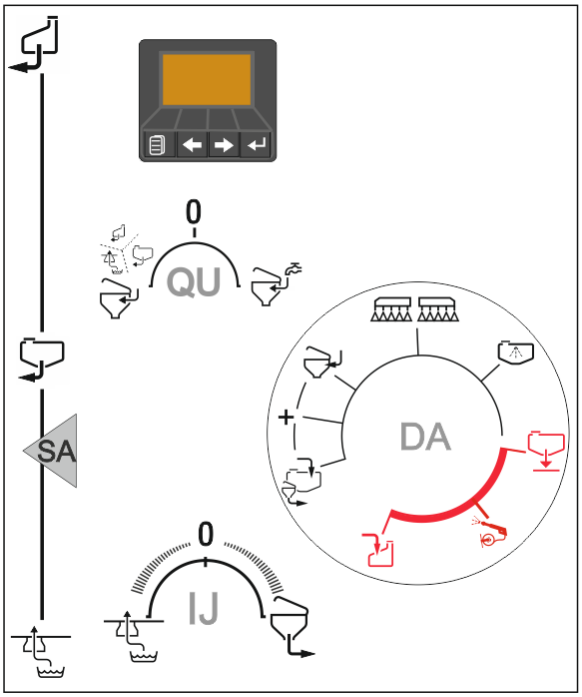

FlowControl: Before emptying, pump the contents of the front tank into the spray liquid tank.

→ When the spray liquid tank of the sprayer is empty, the front tank can no longer be emptied.

12 Cleaning the implement after operation

- Keep the exposure time as short as possible, for example by daily cleaning after the spraying operation is completed. Do not leave the spray liquid in the spray liquid tank for an unnecessarily long period, e.g. overnight.

  The service life and reliability of the field sprayer mainly depend on how long the materials of the field sprayer are exposed to the crop protection agent.
- Clean the field sprayer thoroughly before applying a different crop protection agent.
- Carry out the cleaning process on the field where you last carried out the treatment.
- Carry out the cleaning procedure using water from the flushing water tank.
- You can carry out the cleaning process in the courtyard if you have a collecting facility installed (e.g. a Biobed).

  Observe all national regulations involved.
- When spreading residual quantities on treated areas, observe the maximum permissible application rate for the agents.

- Perform a quick cleaning daily.
- Perform an intensive cleaning:
  - before a critical agent change,
  - before taking out of operation for a longer period.
- Perform the cleaning on the field while driving, since cleaning water is applied intermittently.
- The fill level of the flushing water tank must be sufficient.
- Prerequisite: tank fill level < 1 % (tank as empty as possible).

12.1 Quick cleaning of the empty field sprayer

1. Run the pump.
2. Check the pressure valve chest **DA**: position .

Control terminal, Cleaning menu:

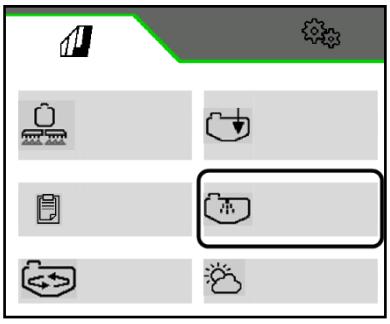

3. The conditions must be fulfilled. Compare the setpoints and actual values.

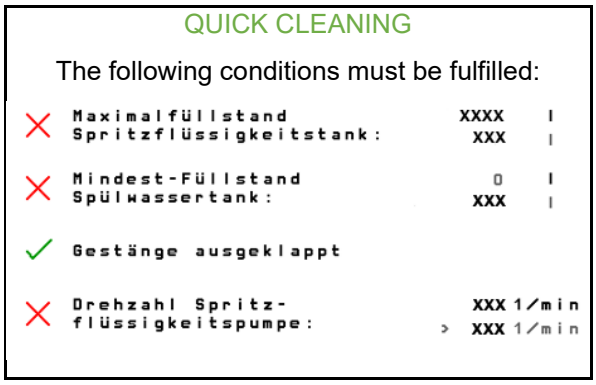

4. **>** Start the quick cleaning.
5. Enter the quantity of flushing water required for cleaning.

→ Agitator is flushed, tank internal cleaning is switched on.

Implements with DUS: the spray line is cleaned.

6. **>** Confirm and start driving at the same time.

→ Cleaning water is sprayed out.

Spraying is switched on and off several times.

7. Drain the final residue, see page **176**.
8. Cleaning the suction filter and pressure filter, see page 178, 179.

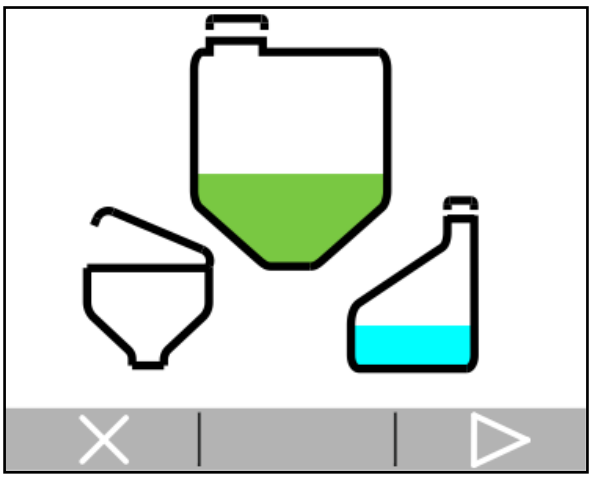

12.2 Intensive cleaning of the empty field sprayer

1. Run the pump.

Control terminal, Cleaning menu:

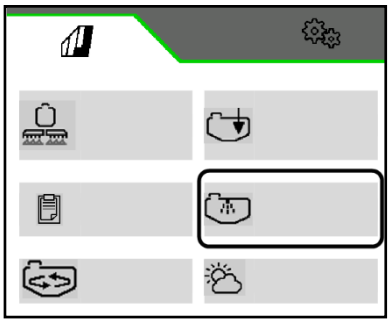

2. The conditions must be fulfilled. Compare the setpoints and actual values.

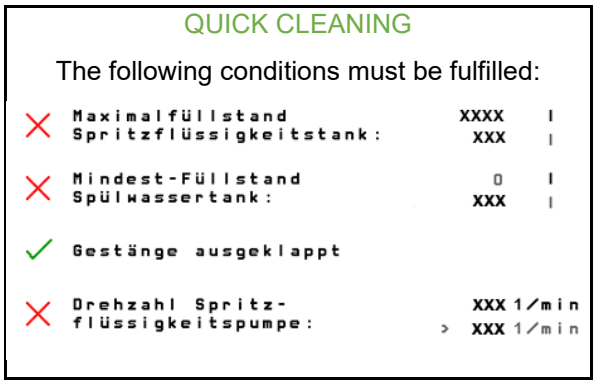

3. **>** Start the intensive cleaning.
4. Enter the quantity of flushing water required for cleaning.

→ Agitators are flushed, tank internal cleaning is switched on.

Implements with DUS: the spray line is cleaned.

5. **>** Confirm and start driving at the same time

→ Cleaning water is sprayed out.

Spraying is switched on and off several times.

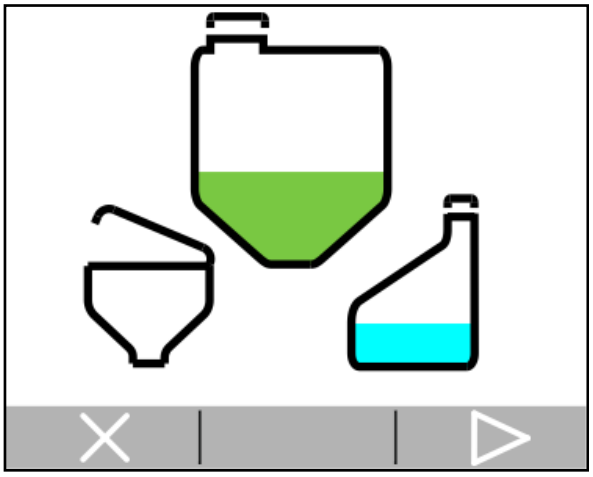

During the intensive cleaning:

- Spraying out the cleaning water three times while driving on the field.

The intensive cleaning procedure takes about 12 minutes.

6. Drain the final residual quantity.
7. Clean the suction filter and pressure filter.
8. If necessary, clean the nozzle filter and line filter in the boom.

→ The completed cleaning is shown on the control terminal.

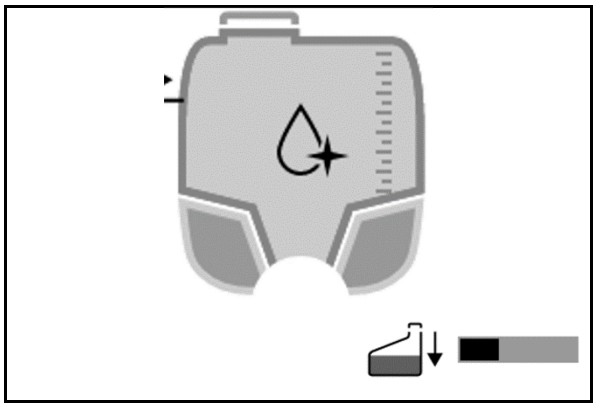

→ Cleaning progress is shown graphically during the cleaning procedure.

12.2.1 Draining the final residual quantities

- On the field: Spread the final residues over the field.

  → Observe the legal stipulations.
- At the farm:
  - o Place a suitable collecting container under the drain opening of the suction valve chest and collect the final residual quantity.
  - o Dispose of the collected spray liquid residual quantity in accordance with the corresponding legal guidelines.
  - o Collect the spray liquid residual quantities in suitable tanks.

1. Place a suitable collecting container under the outlet opening on the suction side.
2. Check the position of the suction valve chest **SA**: .
3. Open the stop tap **EW** under the implement.

→ Drain the residual quantity.

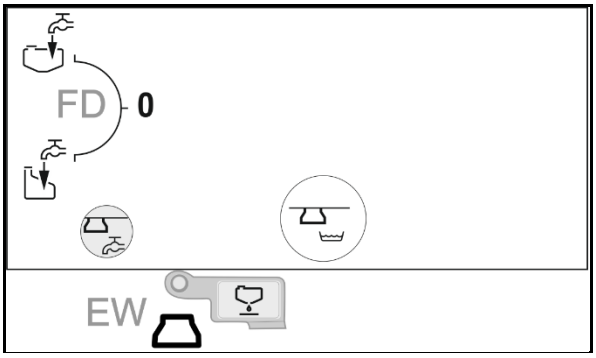

4. Open the stop tap **DE** on the pressure filter.

→ Drain the residual quantity from the pressure filter.

5. Close the stop taps **EW** and **DA** again.

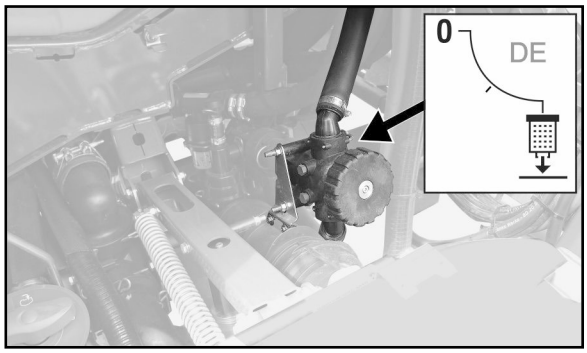

12.3 Performing chemical cleaning

- Chemical cleaning is recommended before critical agent changes and before the implement is decommissioned for a longer period of time.
- Perform the chemical cleaning after the intensive cleaning.

1. Clean the implement.
2. Fill the spray liquid tank with 100 l of water and add the cleaning agent according to the instructions provided by the manufacturer.

To flush in the cleaning agent, the spray liquid tank must be filled with at least 53 gal / 200 l of water.

3. Run the pump.
4. TwinTerminal: Start the circulation cleaning (at least 10 minutes, observe the instructions from the cleaning agent manufacturer).
5. TwinTerminal: select the agitator and operate at maximum intensity for one minute.
6. TwinTerminal: Stop the circulation cleaning.
7. Spray out the mixture on the previously treated field.

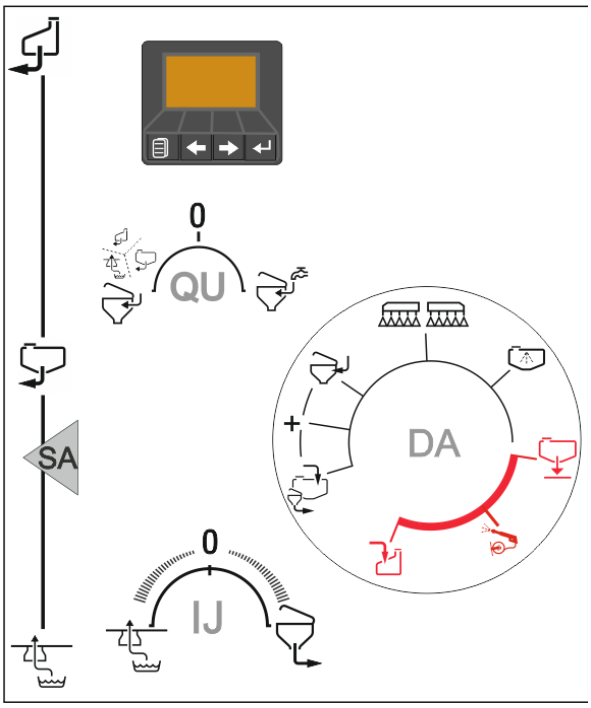

List of available cleaning agents

Product	Manufacturer
Agro-Quick	Adama
JET CLEAR	Sudau agro
Proagro Spritzenreiniger	proagro GmbH

12.4 Cleaning the suction filter

- Clean the suction filter on a daily basis after cleaning the field sprayer.
- Replace defective filters.
- Grease the O-rings.
  Make sure that the O-ring seals are correctly fitted.
- Ensure that there are no leaks after installation

Cleaning the suction filter when the spray liquid tank is full

1. Enter a target quantity that is increased by at least 200 liters.
2. Pressure valve chest **DA** in position .
3. TwinTerminal: Select Suction filter.
4. Fit the sealing cap on the suction coupling and confirm on the TwinTerminal.
5. Drive the pumps and confirm on the Twin-Terminal.
6. Vent the suction filter via the vent valve (20 seconds) and confirm on the TwinTerminal.

→ The filter cup will be suctioned empty.

7. Take out suction filter, clean it and remount the suction filter; then confirm on the Twin Terminal.
8. Interrupt pump drive.

The injector is contaminated with spray liquid.

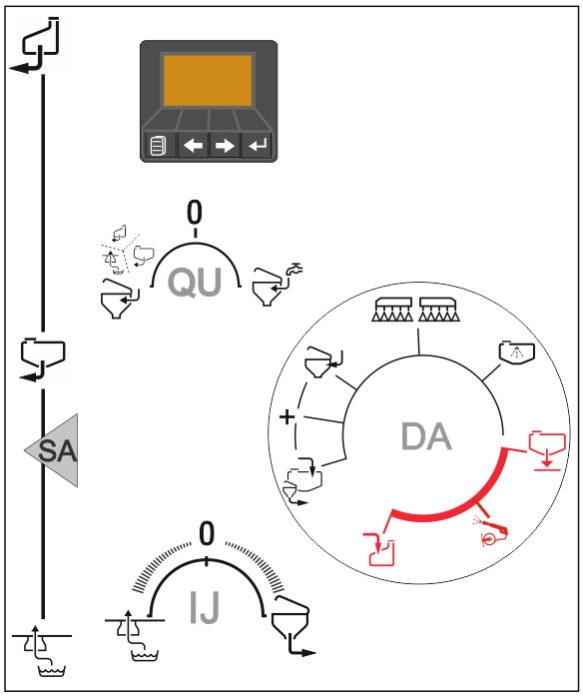

(1) Suction filter

(2) Venting valve

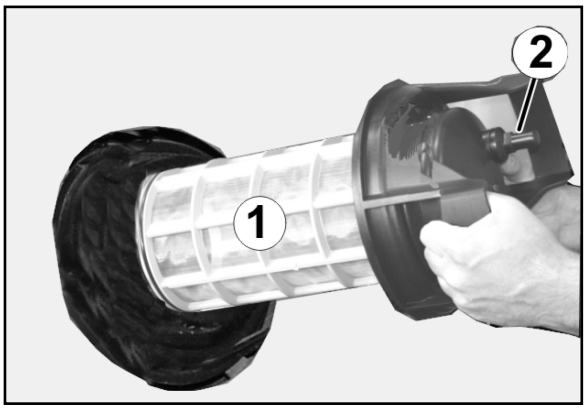

12.5 Cleaning the pressure filter

- Fold down the induction bowl beforehand.
- Replace defective filters.
- Grease the O-rings.
  Make sure that the O-ring seals are correctly fitted.
- During installation, pay attention to the correct position of the filter mount.

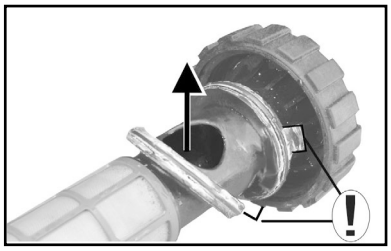

- Ensure that there are no leaks after installation.

Cleaning the pressure filter when the spray liquid tank is full

WARNING
Unwanted emptying of the spray liquid tank via quick emptying!

Never run the pump.

1. TwinTerminal: Select the pressure filter .
2.

Switch off the pump and confirm.
3. Pressure valve chest **DA**: block the liquid circulation.

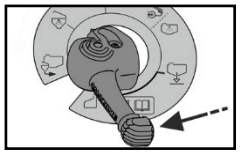

4. Place a collecting bucket under the outlet.
5. Drain the filter using the stop tap **DE**.
6. Undo the union nut.
7. 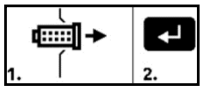

Remove the pressure filter, confirm.
8. 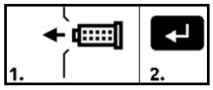

Reinstall the cleaned pressure filter, confirm.
9. Afterwards, put the control elements back to their initial position.

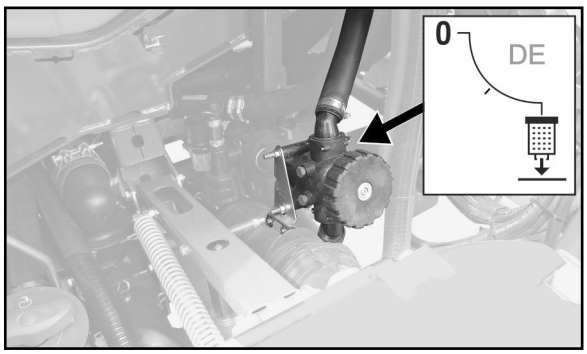

12.6 Flushing the sprayer boom when the spray liquid tank is full

(Work interruption)

1. Control terminal: cleaning menu.
   Flush the boom while driving on the field.

   ✔ Mark the application of spray liquid.

2. Flush the boom.

   2.1 Start driving.

   2.2 **>** Start flushing the boom.

   o Spread at least 50 litres of flushing water while driving.

   o The tank and agitator are not cleaned.

   2.3 **X** Stop flushing the boom.

3. Clean the suction filter.
4. Interrupt the pump drive.

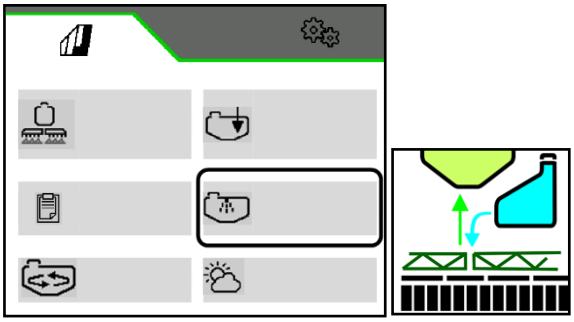

The spray liquid tank and agitators are not cleaned!

Continuing the spraying operation

1. Run the pump.
2. Control terminal: switch on maximum agitation for at least 5 minutes.

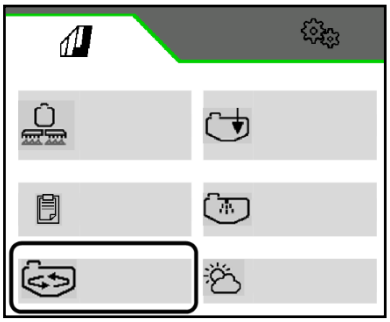

12.7 External cleaning

UF with front tank: FlowControl must be switched off, otherwise the concentration in the front tank will be diluted.

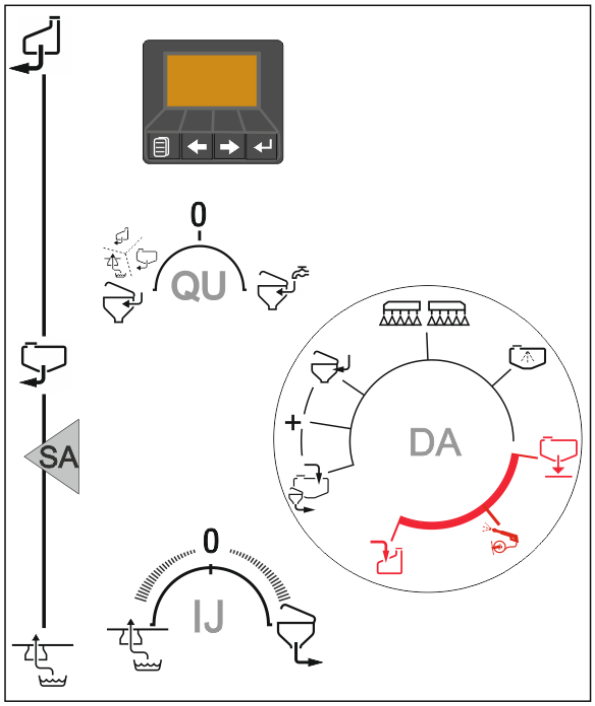

1. Run the pump.
2. TwinTerminal: Select flushing water .
3. If internal cleaning was not previously performed:

   Switch tap **DA** in position for 30 seconds until flushing water is available.
4. Pressure valve chest **DA** in position .
5. Clean the field sprayer and the sprayer boom with the spray gun.
6. Afterwards, put the control elements back to their initial position.

13 Faults

WARNING

Risk of crushing, shearing, cutting, being caught and/or drawn in, trapping or impact through

- **unintentional falling of the machine raised using the tractor's three-point linkage.**
- **unintentional falling of raised, unsecured machine parts.**
- **unintentional start-up and rolling of the tractor-machine combination.**

Secure the tractor and the machine against unintentional start-up and rolling before eliminating faults on the machine. See page 125.

Wait for the machine to stop before entering the machine danger area.

Fault	Cause	Remedy
Liquid does not emerge from the nozzles.	**The nozzles are clogged.**	Eliminate the blockage, see page **186**.
Spray liquid emerges	Leak in the liquid circuit	Select for the suction valve chest or set via the Twin-Terminal.
Spraying nozzles drip	The spraying nozzles are contaminated or damaged.	Eliminate the drip, see page 186.
There is no suction from the pump	Blockage on the suction side (suction filter, filter insert, suction hose).	• Remove the blockage.
	Pump is sucking in air.	• Check the hose connection of the suction hose (optional) on the suction port for leak tightness.
The pump does not have any power	Suction filter and filter insert dirty.	• Clean suction filter and filter insert.
	The valves are jammed or damaged.	• Change the valves.
	Pump is sucking in air, recognisable from the air bubbles in the spray liquid tank.	• Check the hose connections on the suction hose for leak tightness.
The spray cone vibrates	Irregular delivery flow from the pump.	• Check, and if necessary replace, the suction and pressure-side valves (see on page 211).
Oil/spray liquid mixture in the oil filler neck or clearly visible consumption of the oil	Pump diaphragm defective.	• Change all six piston diaphragms (see on page 211).
The required spray rate entered is not achieved	High operational speed; low pump drive speed;	• Reduce the operational speed and increase the pump drive speed until the fault message disappears and the audible alarm signal stops
There has been a deviation from the permissible spray pressure range for the nozzle fitted to the sprayer boom	Deviation from the prescribed operational speed, which has an effect on the spray pressure	• Alter your operational speed to return to the prescribed operational speed range set for spraying operation
In some cases, liquid does not come out of the nozzles when spraying out during the cleaning procedure.	The spray liquid tank was emptied too much the last time it was sprayed out, so that it now contains no or too little cleaning water.	• Reduce the forward speed and/or the target application rate to ensure controlled spraying out during the cleaning procedure.
Flushing water supply is inadequate	Sieve in the flushing water hose is clogged	Take flushing water hose off of the suction valve chest, dismount plug-in socket, and clean sieve.
Calcification in the system	The nozzle body does not open or close. Calcification in the spray liquid tank and suction filter	To eliminate calcification, use special acidifiers (e.g. PH FIX 5 from Sudau Agro), see page 187.

13.1 Eliminate the blockages in the nozzles and nozzle filters

WARNING

Hazards due to accidental contact with spray liquid!

First, flush the nozzles with flushing water.

- Wear personal protective equipment for tasks on the sprayer boom.

1.

Switch off spraying.
2. Flush boom and spray out flushing water.
3. Stop the implement.
4.
Lift the boom to a nozzle height of 1.50 meters.
5.
Secure boom guidance.
6. Switch off the engine.
7. Secure the implement.
8. Put on personal protective equipment.
9. Unscrew the bayonet nut with nozzle.
10. Take out the rubber seal and nozzle filter.
11. Use a replacement nozzle and replacement filter,

    or

    Clean the nozzle and filter with compressed air.
12. Mount the replacement nozzle and replacement filter with a bayonet nut and rubber seal.

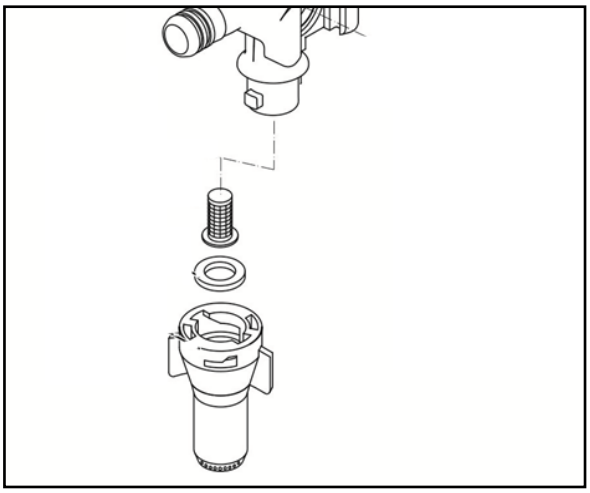

Fig. 5

13.2 Eliminate nozzledrip

WARNING

Hazards due to accidental contact with spray liquid.

- Flush the nozzles with flushing water before performing tasks on the nozzle bodies.

1. Dismount the spring element (2).
2. Remove the diaphragm (1).
3. Clean the diaphragm seat.
4. Check the diaphragm for cracks.
5. Mount diaphragm and spring element.
6. Slide on the nozzle shutter (3) with moderate thumb force.

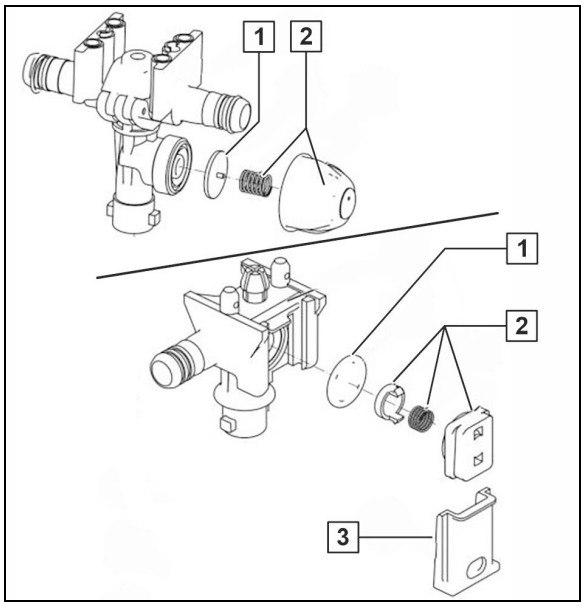

Fig. 6

13.3 Eliminating calcification in the system

Indications that calcification is present:

- The nozzle body does not open or close.
- Error messages on the control terminal
- Calcification in tank and suction filter

To eliminate calcification, use special acidifiers (e.g. PH FIX 5 from Sudau Agro).

DANGER

Health hazard due to contact with acidifiers.

Comply with the instructions for use on the packaging!

1. Completely clean the empty sprayer.
2. Fill 20 to 50 liters of flush water into the spray liquid tank.
3. Activate the spraying pump.
4. Pour acidifier (3 l) into the spray liquid tank via the inspection hatch.

→ Target pH value for descaling 2 - 3

5. Allow the mixture to circulate in the spray line for 10-15 minutes.
6. Interrupt pump drive.
7. **AmaSelect:** Without pump drive, with manual nozzle selection; switch through all nozzle positions several times.
8. Activate the spraying pump.
9. Allow the mixture to circulate in the spray line for several minutes longer.
10. Dilute the mixture with water until the target pH-value of 6 - 7 has been reached.

→ The diluted mixture is harmless and can be used to prepare the spray liquid.

Basic information concerning water hardness and pH-value

Particularly for treatment with trace elements and fertilizer applications, pay attention to the water hardness and the pH-value to ensure clean surfaces and smooth function of all valves.

At water hardness greater than 15° dH (German water hardness), we recommend the use of polyphosphate-based hardness stabilizers. When complying with the manufacturers' specifications, the products are safe for human health and the environment.

Product example: Folmar P30 from Aquakorin.

Particularly for crop protection product mixtures with trace elements such as boron, which increase the pH-value, the pH-value of the ready-to-use spray liquid should be kept below </= 7.

Product example:

- Citric acid
- Acidifying agents, such as:
  - pH-Fix from Sudau
  - Spray Plus from Belchim Crop Protection
  - X-Change from De Sangosse

Commercial sprayer cleaning agents are strongly alkaline and therefore neutralize crop protection product residues, such as sulphonylurea in the sprayer. If there is calcification in the implement, however, they increase the pH-value and are therefore counterproductive for descaling.

14 Cleaning, maintenance and repairs

WARNING

Risk of crushing, shearing, cutting, being caught and/or drawn in, or impact through

- **unintentional falling of the machine raised using the tractor's three-point linkage.**
- **unintentional falling of raised, unsecured machine parts.**
- **unintentional start-up and rolling of the tractor-machine combination.**

Secure the tractor and machine against unintentional start-up and rolling, before carrying out cleaning, maintenance or repair work on the machine; see page 125.

WARNING

Risk of crushing, shearing, cutting, being caught and/or drawn in, or impact through unprotected danger points.

- Mount protective equipment removed when cleaning, maintaining and repairing the machine.
- Replace defective protective equipment with new equipment.

DANGER

- **When carrying out maintenance and repair, observe the safety instructions, particularly "Field sprayer operation" section, on page 35.**
- **You may only carry out maintenance or repair work under moving machine parts that are in a raised position if such parts are secured with suitable, positive-fit locking devices against accidental lowering.**

Before each start-up

1. Check hoses/tubes and connection pieces for any visually obvious defects/leaking connections.
2. Repair any areas of chafing on hoses and pipes.
3. Immediately replace worn or damaged hoses and pipes.
4. Immediately repair leaking connections.

- Regular and proper maintenance will keep your trailed sprayer in good condition for a long time, and will prevent early signs of wear. Regular and proper maintenance is a requirement of our warranty conditions.
- Use only genuine AMAZONE spare parts (see "Spare and wear parts and aids" section, page 17).
- Use only genuine AMAZONE replacement hoses, and hose clamps made of V2A for assembly.
- Specialist knowledge is the requirement for carrying out testing and maintenance operations. This specialist knowledge is not given here in this operating manual.
- Observe environmental protection measures when carrying out cleaning and maintenance work.
- Observe legal requirements when disposing of lubricants, e.g. oils and grease. Also affected by these legal requirements are parts that come into contact with these lubricants.
- Do not exceed a greasing pressure of 400 bar when greasing with high pressure grease guns.
- The following are prohibited:
  - drilling the running gear.
  - drilling through pre-existing holes on the transport frame.
  - welding load-bearing components.
- Protective measures are necessary, such as covering lines or extending lines in particularly critical locations
  - during welding, drilling and grinding work.
  - when working with cut-off wheels near plastic lines and electric wires.
- Clean the field sprayer thoroughly with water before carrying out repair work.
- Carry out repair work on the field sprayer with the pump switched off.
- Thorough cleaning must be carried out before repair work can be carried out inside the spray liquid tank. Keep out of the spray liquid tank.
- Disconnect the machine cable and power supply from the on-board computer when carrying out any cleaning or maintenance work. This applies especially to welding on the machine.

14.1 Cleaning

- Pay particular attention to the brake, air and hydraulic hose lines.
- Never treat brake, air and hydraulic hose lines with benzene, benzene, petroleum or mineral oils.
- After cleaning, grease the machine, in particular after cleaning with a pressure washer / steam jet or liposoluble agents.
- Observe the statutory requirements for the handling and removal of cleaning agents.

Cleaning with a pressure washer / steam jet

- Always observe the following points when using a pressure washer / steam jet for cleaning:
  - Do not clean any electrical components.
  - Do not clean any chromed components.
  - Never aim the cleaning jet of the cleaning nozzle of the high pressure cleaner/steam jet directly at lubrication points, bearings, rating plates, warning signs, and stickers.
  - Always maintain a minimum jet distance of 12 in / 300 mm between the pressure washer or steam jet cleaning nozzle and the machine.
  - The set pressure of the high-pressure cleaner / steam jet must not exceed 1740 psi / 120 bar.
  - Comply with safety regulations when working with pressure washers.

14.2 Winter storage and long periods out of operation

For winter storage, the remaining water / spray liquid is diluted in the entire liquid circuit with a sufficient amount of antifreeze to prevent frost damage.

60 l of antifreeze are required.

AMAZONE recommends wintering with a propylene glycol-based antifreeze (e.g. Glysofor L).

Liquid fertiliser is not suitable as frost protection and can damage the implement.

1. Clean the implement and empty it completely.
2. If necessary attach front tank FT on the tractor and couple FlowControl.
3. Drain the flushing water tank through the hose connection at the bottom of the tank, and reinstall correctly later on.
4. Start the spraying pump.

Drawing antifreeze into the flushing water tank:

Alternative: fill in the antifreeze directly through the tank opening of the flushing water tank

5. Connect the suction hose to the suction connection and put it in the tank with antifreeze.
6. Pressure valve chest **DA** in position .
7. TwinTerminal: Suction in antifreeze.

Pumping antifreeze into the spray liquid tank:

8. TwinTerminal: suction from flushing water tank.
9. When filling through the tank opening of the flushing water tank: pressure valve chest **DA** in position (10 seconds).
10. Pressure valve chest **DA** in position .

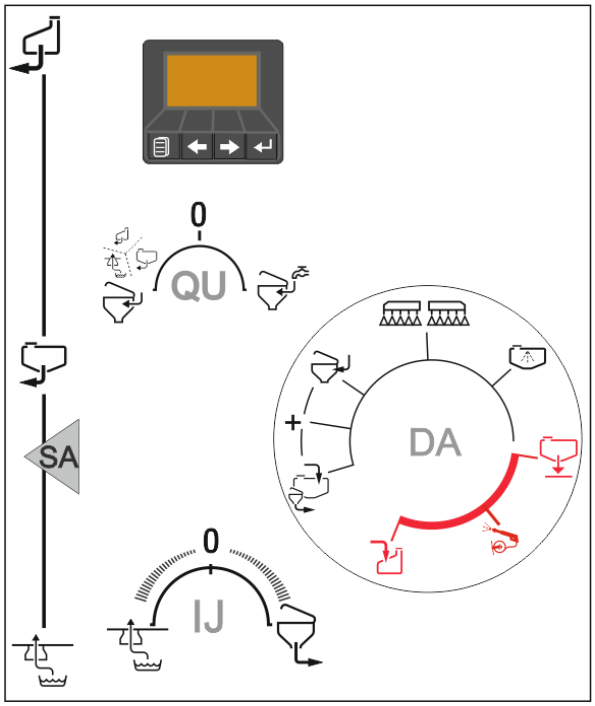

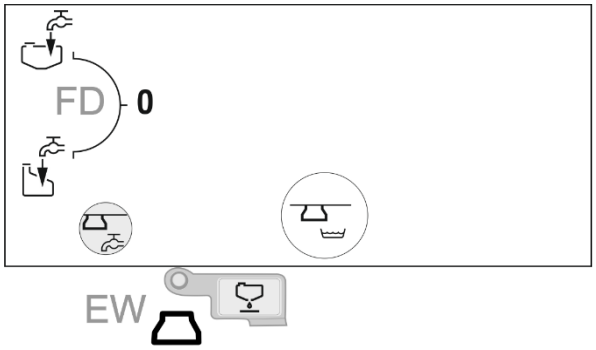

Distributing the antifreeze:

11. TwinTerminal: suction from the spray liquid tank.
12. Recirculate antifreeze in the entire liquid circuit.

To do so, put the pressure tap **DA** in the following position:

- internal cleaning (30 seconds)
- spray the external cleaning into the induction bowl (10 seconds).
- + and change positions on switch tap **IJ**.

  Then switch tap **IJ** in position .

  Switch tap **QU** in position

  Change the positions of switch taps **EA**, **EB** on the induction bowl, actuate the corresponding functions for 10 seconds and evacuate the content.

- and switch the agitator on and off at maximum.

→ DUS: allow the antifreeze to circulate (one minute).

13. TwinTerminal: activate the circulation cleaning.

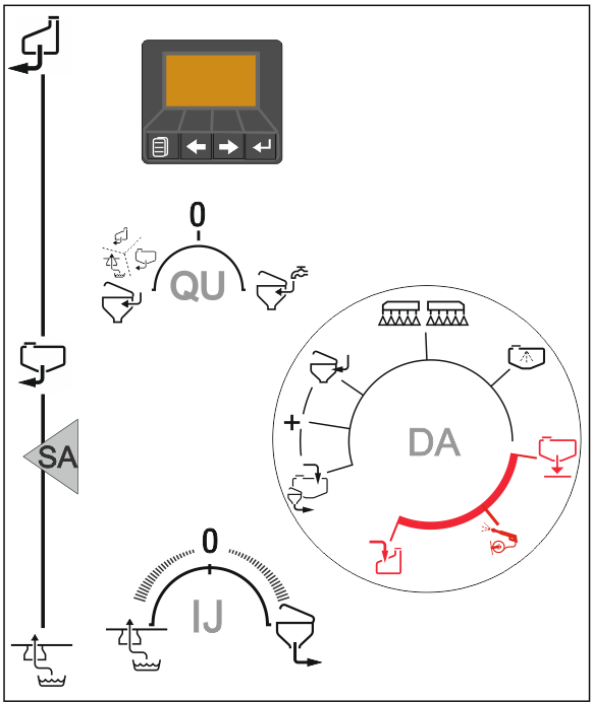

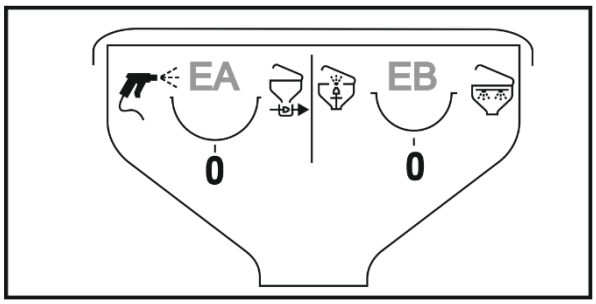

Protect the front tank FT with FlowControl from freezing temperatures:

14. Select manual mode.
15. Pump 20 liters of antifreeze forward.
16. Pump the entire contents of the front tank to the rear.

Applying the antifreeze through the nozzles:

17. Unfold the boom.
18. Switch on spraying until the antifreeze emerges from the nozzles.

- Part-width section control: Switch on and off several times

19. Switch the boundary nozzles / edge nozzles.

⚠ Collect the sprayed liquid!

⚠ Check the sprayed liquid for sufficient frost protection! If necessary, add more antifreeze and repeat the procedure.

Pumping out the antifreeze:

20. Empty the spray liquid tank using the pump.

→ Pump the antifreeze and spray liquid mixture into a suitable tank, re-use or dispose of properly.

21. Drain the suction filter insert and pressure filter insert.

General information:

22. Remove the hose from the pressure sensor to drain the pressure sensor (1).

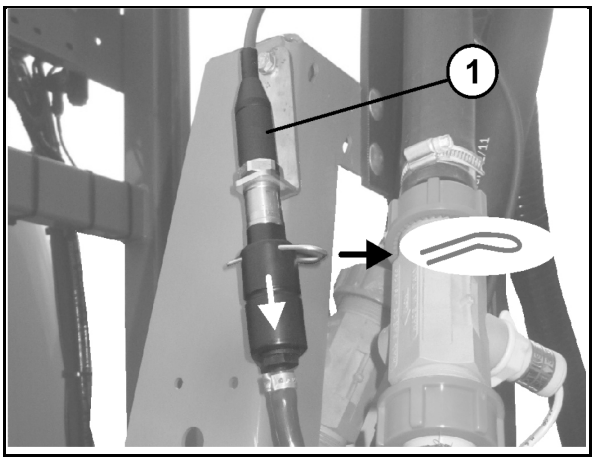

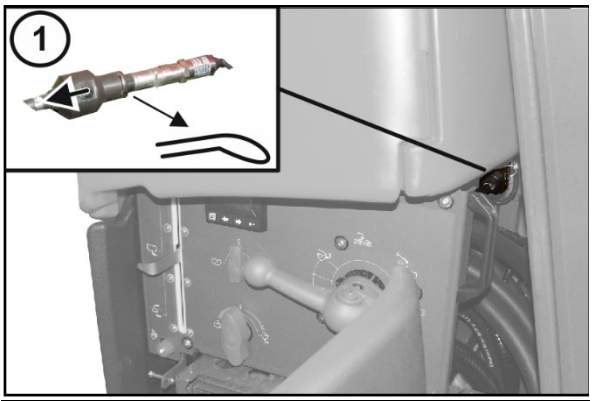

Comfort package

23. Drain the hand wash facility and leave the tap open.
24. Lubricate the cardan joints of the universal joint shaft and grease the profile tubes, if the implement will not be operated for a longer period of time.
25. Treat the piston rods of the hydraulic cylinders with corrosion protection.
26. Store the pressure gauge and any other electronic accessories in a place where they are safe from frost!
27. Perform an oil change on the pumps before recommissioning.

28. Preserve the flushing water pump by applying a little vegetable oil via the upper connection.

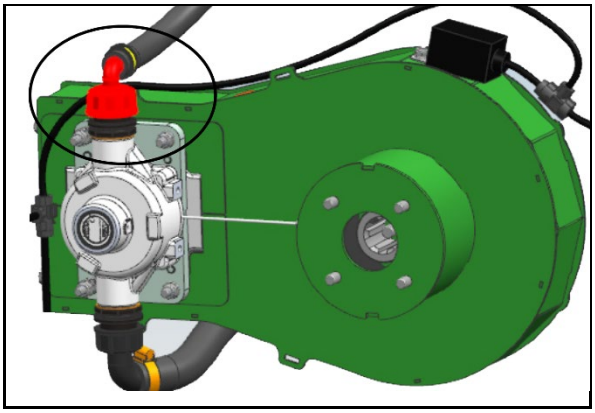

→ Winterizing is shown on the control terminal.

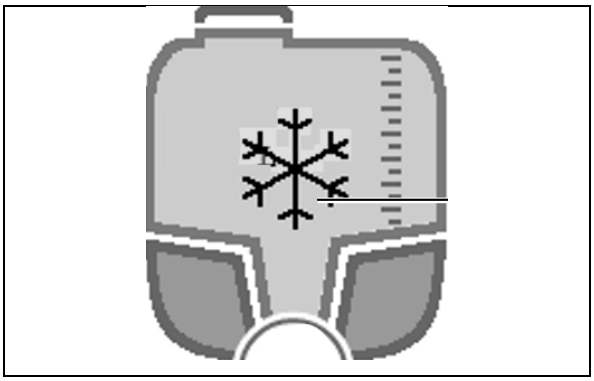

29. Use the drain tap to drain the remaining water in the line filter drain.

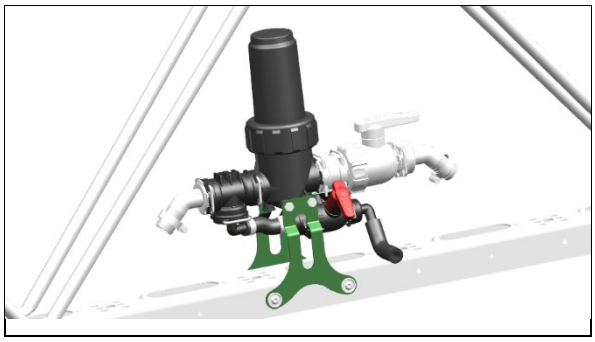

14.3 Lubrication instructions

Lubricate all grease nipples (keep gaskets clean).

Lubricate / grease the implement at the specified intervals.

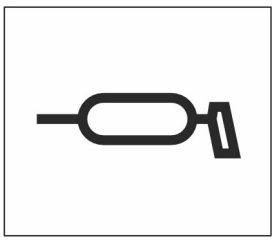

Before greasing, carefully clean lubrication points and grease gun to ensure that contamination is not pressed into the bearings.

Press out all the contaminated grease in the bearings.

Lubricants

For lubrication, use a lithium saponified, multipurpose grease with EP additives:

Company	Lubricant designation
ARAL	Aralub HL 2
FINA	Marson L2
ESSO	Beacon 2
SHELL	Retinax A

Lubricating the PTO shaft

For winter operation, grease the protective tubes to prevent them from freezing.

Also observe the installation and service instructions from the PTO shaft manufacturer, which are fastened to the PTO shaft.

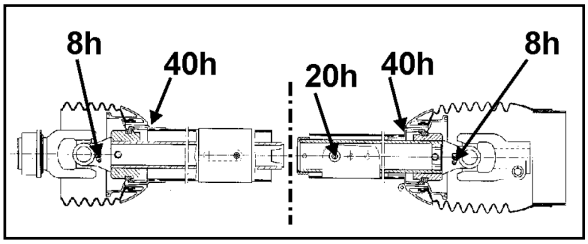

Outer boom locking

	Lubrication point	Interval	Quantity	
	Outer boom locking Super S, Super L1, Super L2	100	2	Grease nipple
	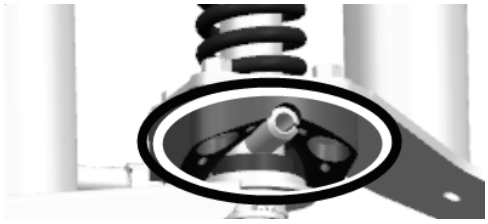			

14.4 Securing the raised boom

Secure the boom with a locking pin against accidental lowering before working on the boom.

1. Raise the boom slightly higher than the pinning position.
2. Secure the boom with the locking pin (1).

This is only intended for brief periods of work under the sprayer boom.

(1) Locking pin secures the boom

(2) Locking pin in parking position

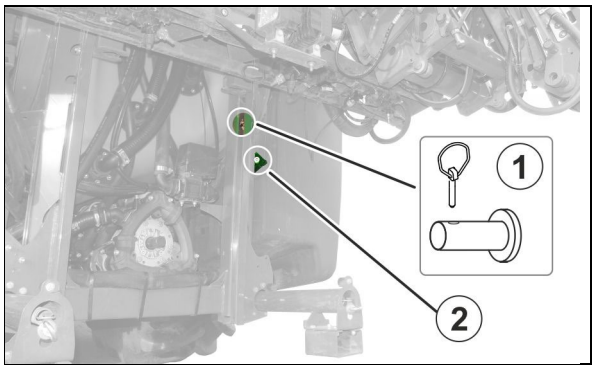

14.5 Maintenance schedule – overview

- Carry out maintenance work when the first interval is reached.
- The times, continuous services or maintenance intervals of any third party documentation shall have priority.

On a daily basis

Component	Maintenance work	see page	Specialist workshop
Pumps	• Check the oil level • Clean and/or flush	**209**	
Fluid filter (Profi-folding only)	• Condition check	**203**	
Spray liquid tank	• Clean and/or flush	**191**	
Line filter in the nozzle lines (if present)		**191**	
Valve chest		**191**	
Spraying nozzle		**191**	
Hydraulic hose lines	• Check for defects • Check for leak tightness	**200**	**X**
Spraying pump	• Check the oil level • Check the oil (the oil must not be cloudy)	196	

Every three months / 200 operating hours

Component	Maintenance work	see page	Specialist workshop
Line filter	• Clean • Replace damaged filter inserts	**191 / 108**	
Booms	• Check the boom sections for cracks or initial crack formation		

Annually / 1,000 operating hours

Component	Maintenance work	see page	Specialist workshop
Pumps	• Oil change every 500 operating hours • Check valves and, if necessary, replace • Check the piston diaphragm and, if necessary replace	**210** **211** **211**	**X**
Fluid filter	• Replace	**203**	**X**
Flow meter and return flow meter	• Calibrate the flow meter • Align the return flow meter	**218**	
Nozzles	• Calibrate the field sprayer and check the lateral distribution; if necessary, replace worn nozzles	**186**	
AmaSwitch	• Replace the diaphragm of the single-nozzle control	217	

As necessary

Component	Maintenance work	see page	Specialist workshop
Super-S boom	• Correct the settings	**205**	
Upper and lower link pins	• Check for defects and, if necessary, replace worn pins	**218**	
Solenoid valves	• Cleaning	**203**	
Hydraulic throttle valve	• Adjusting the actuation speed	**205**	
Hydraulic plug	• Rinse / exchange the filter in the hydraulic plug	**204**	

14.6 Hydraulic system

WARNING

Risk of infection through the high pressure hydraulic fluid of the hydraulic system entering the body.

- Only a specialist workshop may carry out work on the hydraulic system.
- Depressurise the hydraulic system before carrying out work on the hydraulic system.
- When searching for leak points, always use suitable aids.
- Never attempt to plug leaks in hydraulic hose lines using your hand or fingers.

  Escaping high pressure fluid (hydraulic fluid) may pass through the skin and ingress into the body, causing serious injuries.

  If you are injured by hydraulic fluid, contact a doctor immediately. Risk of infection

- When connecting the hydraulic hose lines to the tractor hydraulic system, ensure that the hydraulic system is depressurised on both the tractor and the trailer.
- Ensure that the hydraulic hose lines are connected correctly.
- Regularly check all the hydraulic hose lines and couplings for damage and soiling.
- Have the hydraulic hose line checked at least once a year by a specialist for proper functioning.
- Replace the hydraulic hose line if it is damaged or worn. Only use genuine AMAZONE hydraulic hose lines.
- The hydraulic hose lines should not be used for longer than six years, including any storage time of maximum two years. Even with proper storage and approved use, hoses and hose connections are subject to natural ageing, thus limiting the length of use. However, it may be possible to specify the length of use from experience values, in particular when taking the risk potential into account. In the case of hoses and hose connections made from thermoplastics, other guide values may be decisive.
- Dispose of old oil in the correct way. If you have problems with disposal, contact your oil supplier.
- Keep hydraulic fluid out of the reach of children!
- Ensure that no hydraulic fluid enters the soil or waterways.

14.6.1 Labelling of hydraulic hose lines

Valve chest identification provides the following information:

Fig. 7/...

(1) Manufacturer's mark on the hydraulic hose lines (A1HF)

(2) Date of manufacture of the hydraulic hose lines (02 04 = February 2004)

(3) Maximum approved operating pressure (210 BAR).

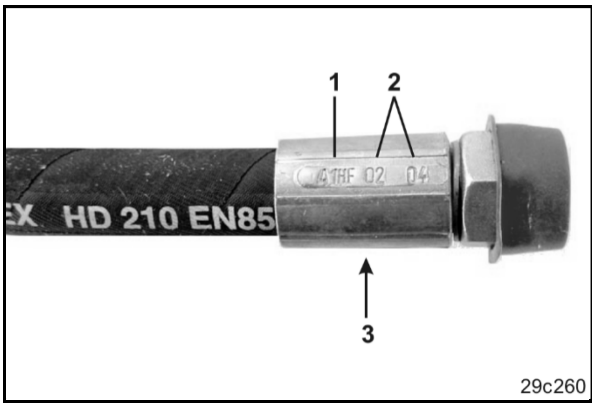

Fig. 7

14.6.2 Maintenance intervals

After the first 10 operating hours, and then every 50 operating hours

1. Check all the components of the hydraulic system for tightness.
2. If necessary, tighten screw unions.

Before each start-up:

1. Check hydraulic hose lines for visible damage.
2. Eliminate any scouring points on hydraulic hose lines and pipes.
3. Immediately replace worn or damaged hydraulic hose lines.

14.6.3 Inspection criteria for hydraulic hose lines

For your own safety and in order to reduce pollution, ensure the following inspection criteria.

Replace hoses if the respective hose fulfils at least one of the following criteria:

- Damage to the outer layer up to the ply (e.g. scouring points, cuts, cracks).
- Brittleness of the outer layer (crack formation of the hose material).
- Deformations which do not match the natural shape of the hose. Both in a depressurised and pressurised state or when bent (e.g. layer separation, bubble formation, pinching, bends).
- Leak points.
- Installation requirements not complied with.
- Life span of 6 years has been exceeded.

  The date of manufacture of the hydraulic hose line on the assembly is decisive for determining these six years. If the date of manufacture on the assembly is "2004", then the hose should not be used beyond February 2010. See also "Labelling of hydraulic hose lines".

Common causes for leaking hoses / pipes and connection pieces include:

- missing O-rings or seals
- damaged or badly fitting O-rings
- brittle or deformed O-rings or seals
- foreign bodies
- badly fitting hose clips

14.6.4 Installing and removing hydraulic hose lines

Use

- only genuine AMAZONE replacement hoses. These hoses stand up to chemical, mechanical and thermal loads.
- hose clips made from V2A for fitting hoses, as a rule.

When installing and removing hydraulic hose lines, always observe the following information:

- Ensure cleanliness. • Always install the hydraulic hose lines to ensure the following in all operating positions
  - o There is no tension, apart from the hose's own weight.
  - o There is no possibility of jolting on short lengths.
  - o External mechanical influences on the hydraulic hose lines are avoided.

    Use appropriate arrangements and fixing to prevent any scouring of the hoses on components or on each other. If necessary, secure hydraulic hose lines using protective covers. Cover sharp-edged components.
  - o The approved bending radii may not be exceeded.

- When connecting a hydraulic hose line to moving parts, the hose length must be appropriate so that the smallest approved bending radius is not undershot over the whole area of movement and/or the hydraulic hose line is not overtensioned.
- Fix the hydraulic hose lines at the specified fixing points. There, avoid hose clips, which impair the natural movement and length changes of the hose.
- The coating of hydraulic hose lines is not permitted.

14.6.5 Fluid filter

- Profi-folding only:

Hydraulic fluid filter (1) with contamination indicator (2).

- Green Filter fully functional
- Red Replace filter

To remove the filter, twist off the filter cover and remove the filter.

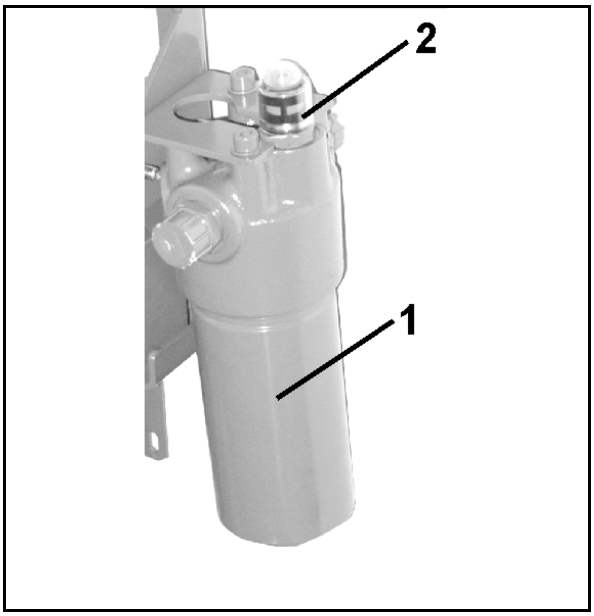

WARNING

Beforehand, depressurise the hydraulic system.

Otherwise there is a risk of injury from hydraulic fluid escaping at high pressure.

After replacing the filter, press the contamination indicator back into place.

→ **Green ring again visible.**

14.6.6 Cleaning the solenoid valves

- hydraulic block for Profi-folding

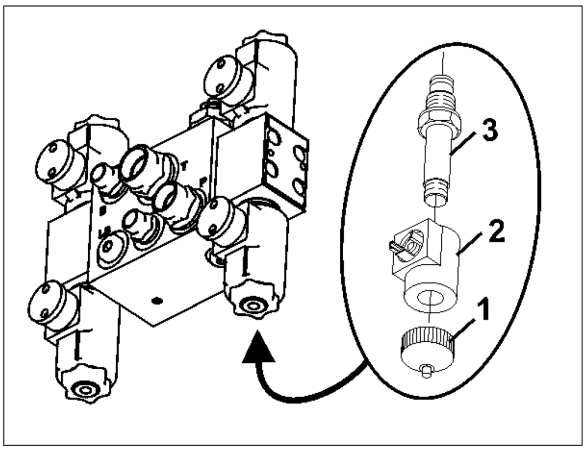

To eliminate impurities from the solenoid valves, they must be flushed through. This may be necessary if deposit prevent the slider fully opening or closing.

1. Unscrew the magnetic cap (1) abschrauben.
2. Remove the solenoid (2) abnehmen.
3. Unscrew the valve rod (3) with valve seats and clean with compressed air or hydraulic fluid

CAUTION

Beforehand, depressurise the hydraulic system.

Otherwise there is a risk of injury from hydraulic fluid escaping at high pressure.

14.6.7 Clean / exchange the filter in the hydraulic plug

Not with Profi-folding.

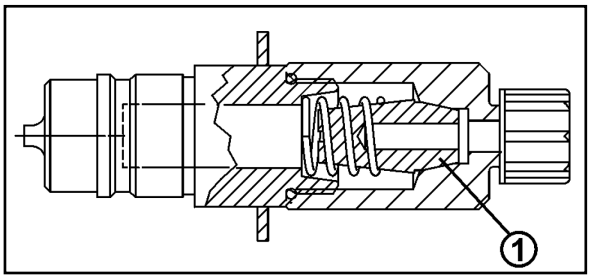

The hydraulic plugs are equipped with a filter (1) that may block and then have to be cleaned / exchanged.

This is the case when the hydraulic functions run slower.

1. Unscrew the hydraulic plug from the filter housing.
2. Remove the filter with compression spring.
3. Clean / exchange the filter.
4. Re-fit the filter and compression spring correctly.
5. Screw back on the hydraulic plug. In doing so, observe the correct seating of the O-ring seal.

CAUTION

Danger of injuries from escaping hydraulic oil at high pressure!

Work on the hydraulic system only in a depressurized state.

14.7 Adjusting the hydraulic throttle valve

The operating speeds of the individual hydraulic functions are set in the factory.

However, depending on the type of tractor, it may be necessary to correct these speed settings.

The operating speed for a hydraulic function can be adjusted by screwing the hexagon socket head screw on the corresponding throttle in or out.

- Reduce operating speed = screw in hexagon socket head screw.
- Increase operating speed = screw out hexagon socket head screw.

Always adjust the two throttles in a throttle pair equally when correcting the operating speed of a hydraulic function.

14.7.1 Q-plus boom

(1) Hydraulic throttle valve - fold out the boom.
(2) Hydraulic throttle valve - lock and unlock the swing compensation.
(3) Hydraulic throttle valve - fold in the left-hand boom.
(4) Hydraulic throttle valve - fold in the right-hand boom.
(5) Hydraulic joint - height adjustment (the throttle is on the left-hand hydraulic cylinder for the height adjustment).

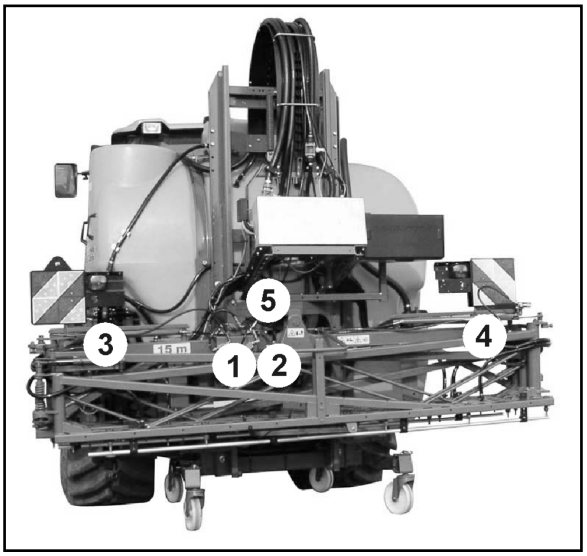

When correcting the operating speed at which the boom folds in and out, always adjust all three hydraulic throttle valves (1 and 3) equally.

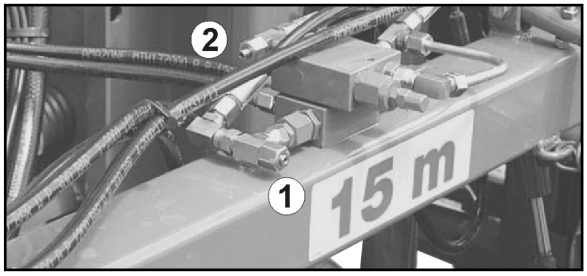

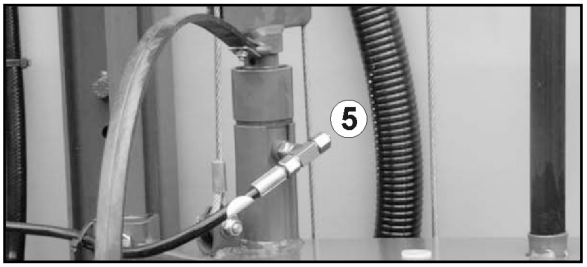

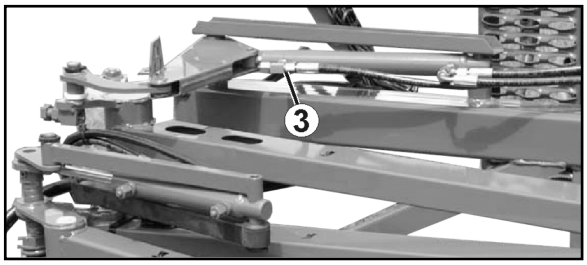

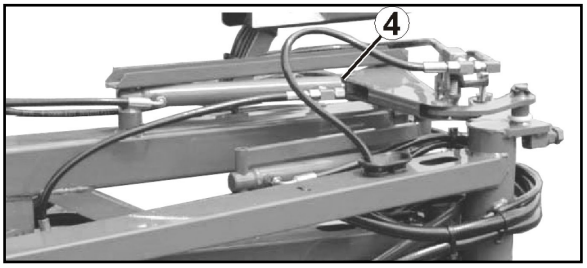

14.7.2 Super-S boom

Folding via the tractor control unit

(1) Hydraulic throttle valve - height adjustment.

(2) Hydraulic throttle valve - fold down the left-hand boom.

(3) Hydraulic throttle valve - fold down the right-hand boom.

(4) Hydraulic throttle valve - lock and unlock the swing compensation.

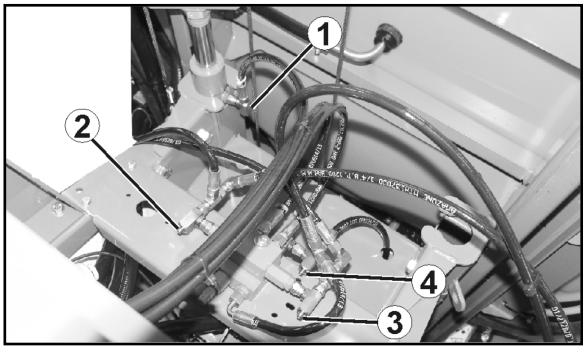

(5) Hydraulic throttle valve - fold out the boom.

(6) Hydraulic throttle valve - fold in the boom.

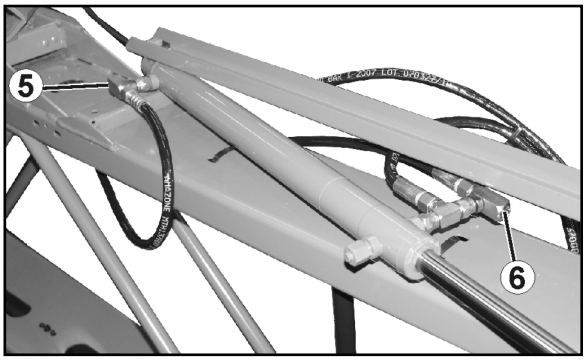

Profi-folding I

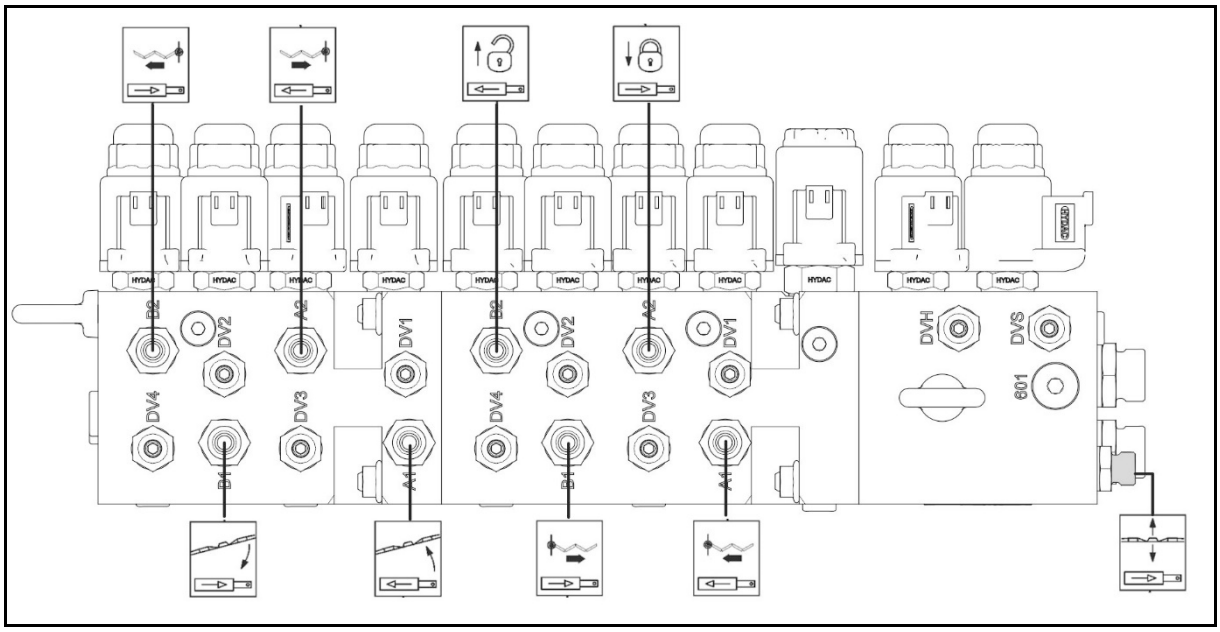

Unfold / fold in left

Unfold / fold in right

Lock vibration compensation /

Unlock vibration compensation

Tilt left / Tilt right

Lift / lower boom

Angle up / angle down left

Angle up / angle down right

Profi-Klappung II

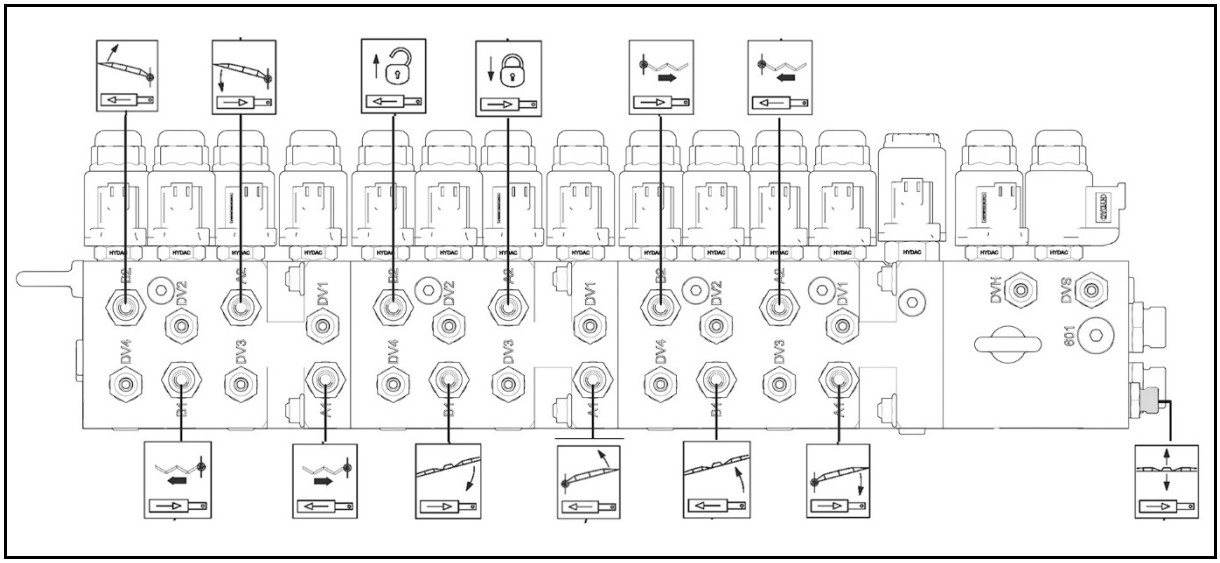

14.8 Adjustments on the folded-out sprayer boom

Alignment parallel to the ground

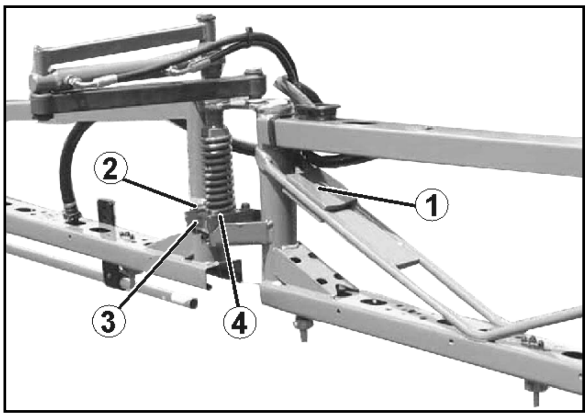

With the sprayer boom folded out and correctly set, all the spraying nozzles must be of the same parallel distance to the ground.

If this is not the case, with the swing compensation **unlocked** align the folded-out sprayer boom by means of counterweights (1). Secure the counterweights to the boom extension accordingly.

Horizontal alignment

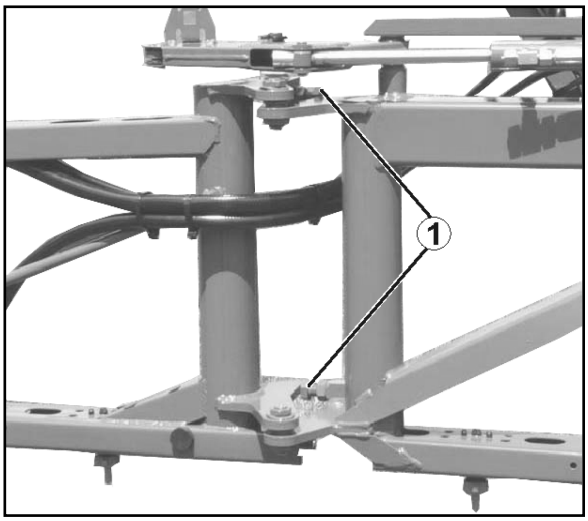

Viewed in the direction of travel, all boom sections of the sprayer boom must be flush in line. Horizontal alignment may be necessary

- after a long period of use
- or in the event of rough contact between the ground and the sprayer boom.

Inner boom section

1. Release the lock nut of the adjusting screw (1).
2. Turn the adjusting screw against the stops until the inner boom is flush with the sprayer boom middle section.
3. Tighten the lock nut.

Outer boom section

1. Release the screws (2) of the securing link (3). The boom is aligned directly at the plastic catch (4) through the slotted holes of the securing link.
2. Align the boom section.
3. Tighten the screws (2).

14.9 Pump

WARNING

Risks due to accidental contact with spray liquid!

Clean the implement with flushing water before you remove the spraying pump or other components that come into contact with spray agent or spray liquid.

14.9.1 Checking the oil level

- Only use 20W30 branded oil or 15W40 multi purpose oil.
- Ensure the correct oil level. Damage may be caused both by the oil level being too low or too high.
- Foam generation and cloudy oil are signs of a faulty pump membrane.

  Do not run a defective pump.

1. Check whether the oil level is visible at the mark with the pump not running and standing on a flat surface.
2. Check whether the oil is clear.
3. If the oil level is not visible at the mark, remove the lid and top up with oil.

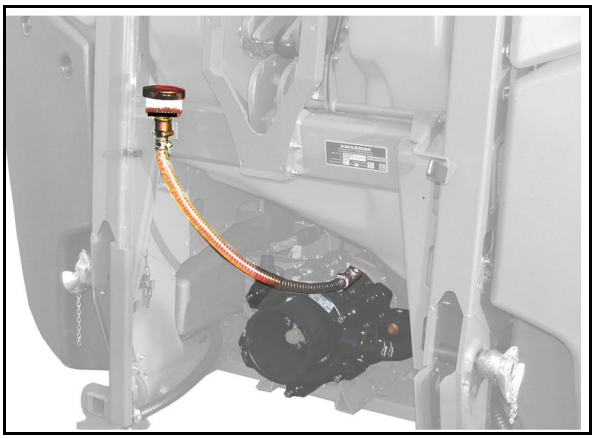

14.9.2 Changing the oil

1. Remove the pump.
2. Take off the cover.
3. Drain the oil.
   3.1 Turn the pump upside down.
   3.2 Turn the drive shaft by hand until the spent oil has completely flowed out.

   The option also exists to drain the oil via the drain plug. However, with this procedure, a slight oil residue remains in the pump; we therefore recommend the first procedure.
4. Place the pump on a level surface.
5. Turn the drive shaft alternately right and left and slowly fill with new oil.
6. Mount the pump.
7. Briefly drive the pump.
8. Pour in the remaining quantity of oil for the sight glass, until oil is visible at the mark.

14.9.3 Checking and replacing the suction and pressure-side valves

- Pay attention to the respective installation positions of the valves on the suction and pressure sides before removing the valve groups (5).
- When reassembling, ensure that the valve guide (9) is not damaged. Damage may cause the valves to jam.
- Always tighten the screws (1) in a crosswise fashion using the specified torque. Improper tightening of the screws causes warping, which results in leaks.

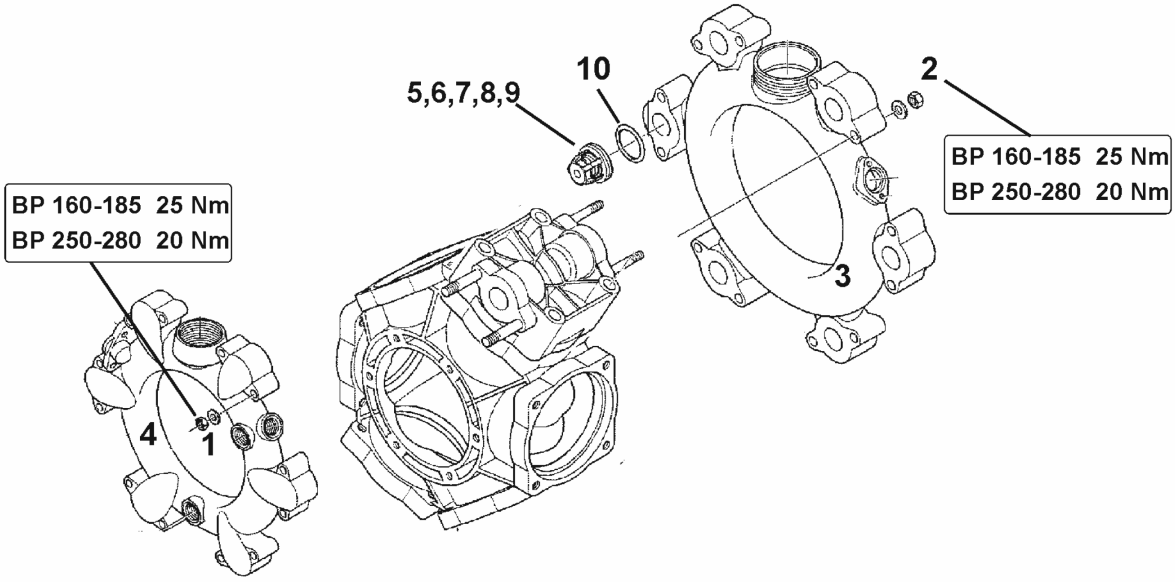

1. If necessary, remove the pump.
2. Remove the nuts (1,2).
3. Remove the suction and pressure port (3 and 4).
4. Remove the valve groups (5).
5. Check the valve seat (6), valve (7), valve spring (/8) and valve guide (9) for wear or damage.
6. Remove the O-ring (10).
7. Replace defective parts.
8. After testing and cleaning, fit the valve groups (5).
9. Insert new O-rings (10).
10. Mount the suction (3) and pressure port (4) on the pump housing.
11. Tighten the nuts (1,2) in a crosswise fashion using a torque of **18 ft-lb / 25 Nm (BP 160-185) and 15 ft-lb / 20 Nm (AR 250-280)**

14.9.4 Checking and replacing piston diaphragms (workshop work)

- At least once a year, check that the piston diaphragm (8) is in perfect condition by removing it.
- Pay attention to the respective installation positions of the valves on the suction and pressure sides before removing the valve groups (5).
- Check and replace the piston diaphragm for each piston individually. Only remove the next piston in sequence after the currently removed piston has been completely checked and refitted.
- Always swivel the piston to be checked upwards so that the oil in the pump housing does not run out.
- As a rule, replace all piston diaphragms (8), even if only one piston diaphragm distorted, punctured or porous.

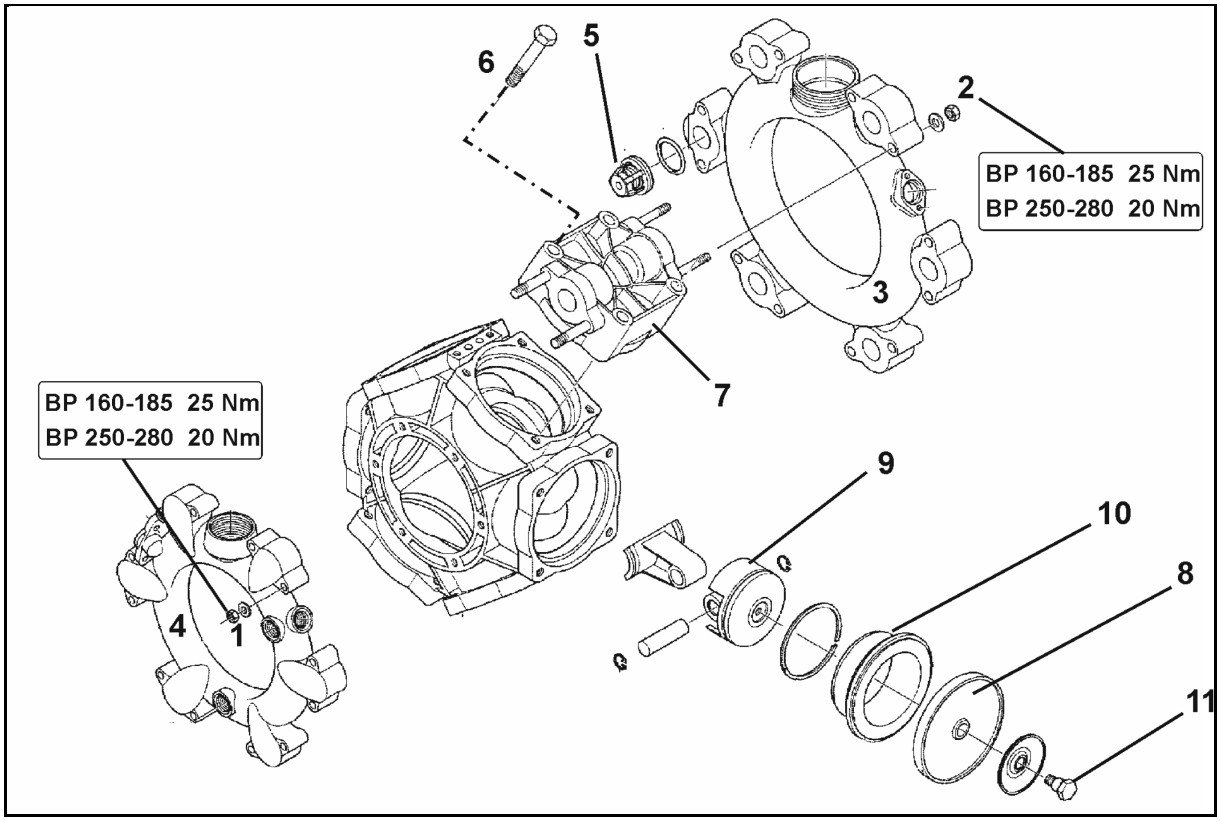

Checking the piston diaphragm

1. If necessary, remove the pump.
2. Remove nuts (1, 2).
3. Remove the suction and pressure port (3 and 4).
4. Remove the valve groups (5).
5. Remove the nuts (6).
6. Remove the cylinder head gasket (7).
7. Check the piston diaphragm (8).
8. Replace the damaged piston diaphragm.

Replacing the piston diaphragm

- Ensure the correct position for the recesses and/or holes on the hydraulic cylinders.
- Secure the piston diaphragm (8) with a washer disc and a screw (11) on the piston (9), so that the rim shows on the cylinder head side (7).
- Always tighten the nuts (1,2) in a crosswise fashion using the specified torque. Improper tightening of the screws causes warping, which results in leaks.

1. Undo the screw (/11) and remove the piston diaphragm (8) and the washer disc from the piston (9).
2. If the piston diaphragm has been punctured, drain the oil/spray liquid mixture from the pump housing.
3. Remove the hydraulic cylinder (10) from the pump housing.
4. Clean the pump housing by flushing it thoroughly with diesel oil or paraffin.
5. Clean all sealing faces.
6. Insert the cylinder (10) back into the pump housing.
7. Fit the piston diaphragm (8).
8. Mount the cylinder head (7) on the pump housing and tighten the screws (6) an equal amount in a crosswise fashion.

   Use adhesive for medium tight screw connections for the screw connection!
9. After testing and cleaning, fit the valve groups (/5).
10. Insert new O-rings.
11. Mount the suction (3) and pressure port (4) on the pump housing.
12. Tighten the nuts (1,2) in a crosswise fashion using a torque of **25 Nm (BP 160-185) / 20 Nm (AR 250-280)**.

14.10 Metering the field sprayer

Test the field sprayer by metering

- **before the start of the season.**
- **each time the nozzles are changed.**
- **to check the setting information in the spray tables.**
- **in the case of deviations between the actual and required application rate [l/ha].**

Observed deviations between the actual and required application rate [l/ha] can be caused by:

- the difference between the actual forward speed and that indicated on the tractor meter and/or
- natural wear to the spraying nozzles.

Accessories required for metering:

(1) Quick-check cup

(2) Stopwatch

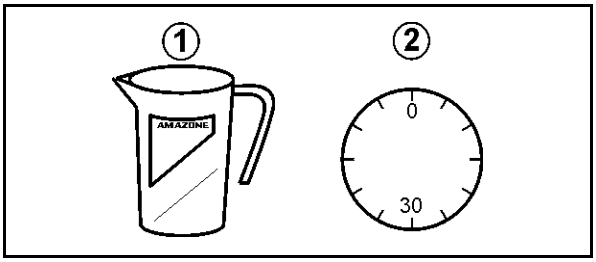

Determining the actual application rate while stationary via the individual nozzle output

Determine the nozzle output on at least 3 different nozzles. To do so, check one nozzle on the left and right boom section respectively, and one in the middle of the sprayer boom, as follows.

1. Control terminal:

   1.1 Enter the value for the required application rate on the control terminal.

   1.4 Enter simulated speed.
2. Fill the spray liquid tank with water (approx. 1000 l).
3. Switch on the agitator.
4. Switch on the sprayer and check that all of the nozzles work properly.
5. Determine the individual nozzle output [l/min] on several nozzles.

   To do so, hold the quick-check cup for exactly 30 seconds under a nozzle.
6. Switch off spraying.
7. Determine the average individual nozzle output [l/ha].

- Using the table on the quick-check cup.
- By calculation.
- Using the spray table.

Example:

Noz. size	'06'
Intended forward speed	7 km/h
Nozzle output on the left boom section:	0.85 l/30s
Nozzle output in the middle	0.84 l/30s
Nozzle output on the right boom section:	0.86 l/30s
Calculated average value:	**0.85 l/30s → 1.7 l/min**

1. Determining the individual nozzle output [l/ha] with the quick-check cup

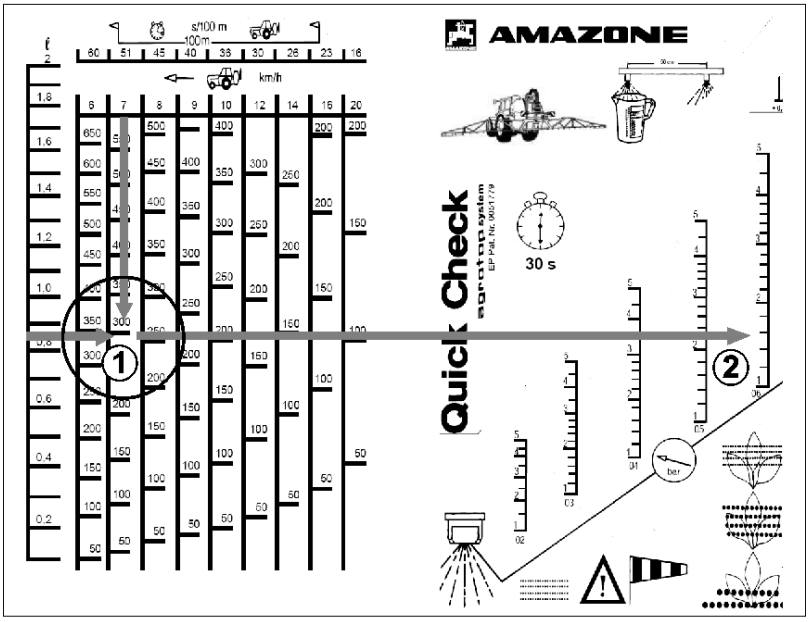

(1) →Determined application rate 290 l/ha
(2) →Determined spray pressure 1.6 bar

2. Calculating the individual nozzle output [l/ha]

$$\frac{d\ [l/min] \times 1200}{e\ [km/h]} = \text{Application rate } [l/ha]$$

- d: Nozzle output (calculated average value) [l/min]
- e: Forward speed [km/h]

$$\frac{1.7\ [l/min] \times 1200}{7\ [km/h]} = 291\ [l/ha]$$

3. Reading the individual nozzle output [l/ha] from the spray table

From the spray table (see page 228):

→ Application rate 291 l/ha
→ Spray pressure 1.6 bar

If the determined values for the application rate and application pressure do not match the set values:

- Calibrate the flow meter (see ISOBUS software operating manual).
- Check all nozzles for wear and blockages.

14.11 Line filter

- Clean the line filters (1) 3 - 4 months depending on operating conditions).
- Change damaged filter inserts.

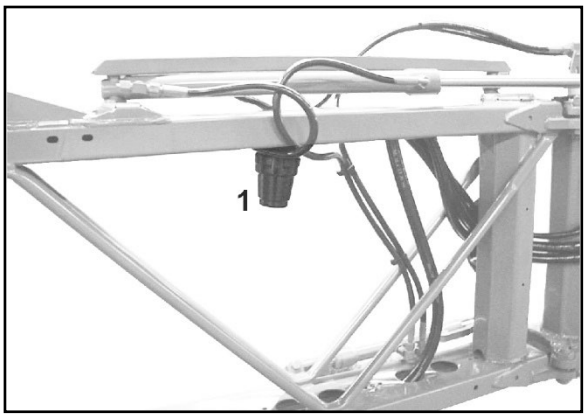

14.12 Replacing the diaphragm of the single-nozzle control

1. On the control terminal, switch on spraying

2. Use the union nut to dismount the AmaSwitch motor. Do not take off the connection cable to do this.

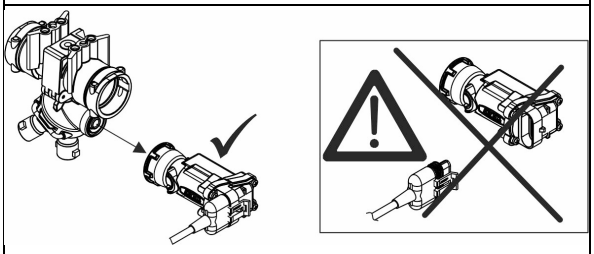

3. Also dismount the washer.

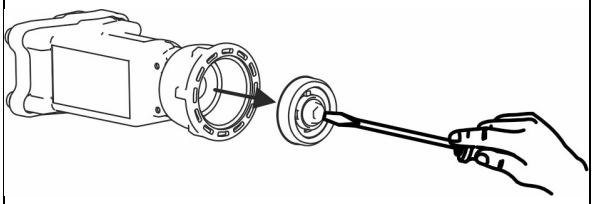

4. Replace the diaphragm.

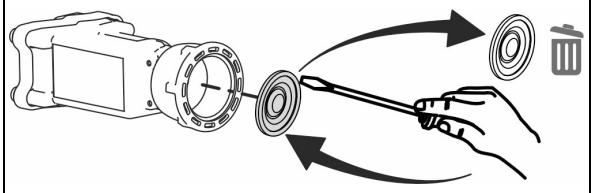

→ While doing so, ensure the correct position of the diaphragm.

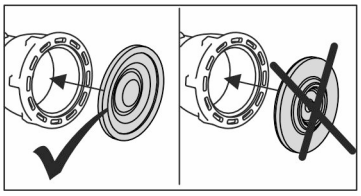

5. Remount the washer.

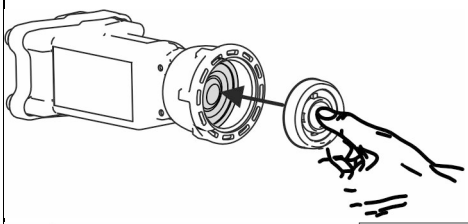

6. Use the union nut to remount the motor.

→ In this process, ensure that the motor does not turn as well.

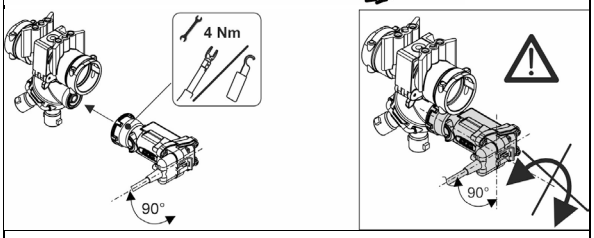

7. On the control terminal, switch off spraying.

14.13 Instructions on testing the field sprayer

- Only authorised centres are permitted to carry out spray tests.
- According to law, a spray test must be carried out:
  - 6 months after commissioning (if not performed at time of purchase) at the latest, then
  - every two years thereafter.

Field sprayer test set (optional), order no.: 114586

Pressure gauge test

(1) Push-on cap (order no.: 913954) and connector (order no.: ZF195)

(2) Blind hose (order no.: 116059)

(3) Pressure gauge connection (order no.: 7107000)

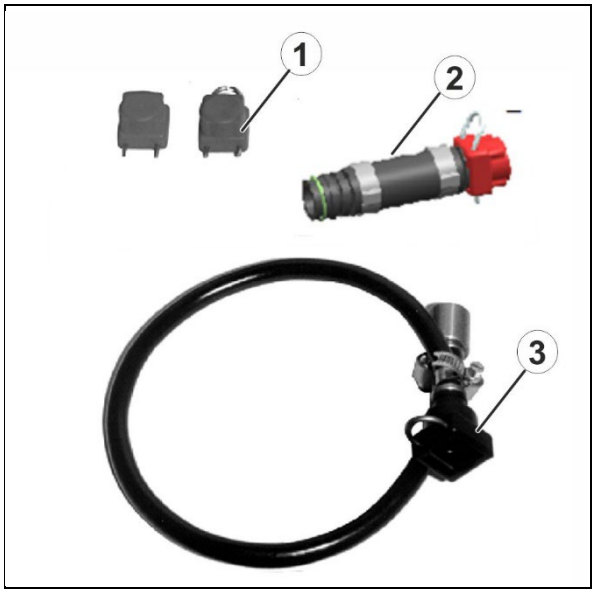

Flow meter test

(1) O-ring (order no.: FC122)

(2) Hose connection (order no.: GE095)

(3) Union nut (order no.: GE021)

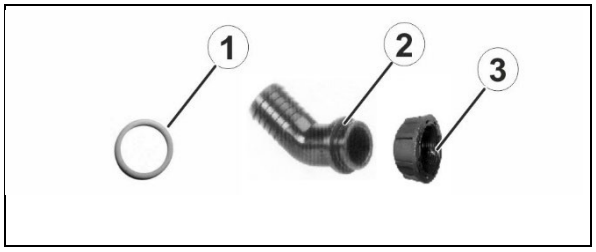

Pump test

Pump hose for connecting the pressure hose on the measuring device and dummy cap for pressure relief valve (order no. 122580)

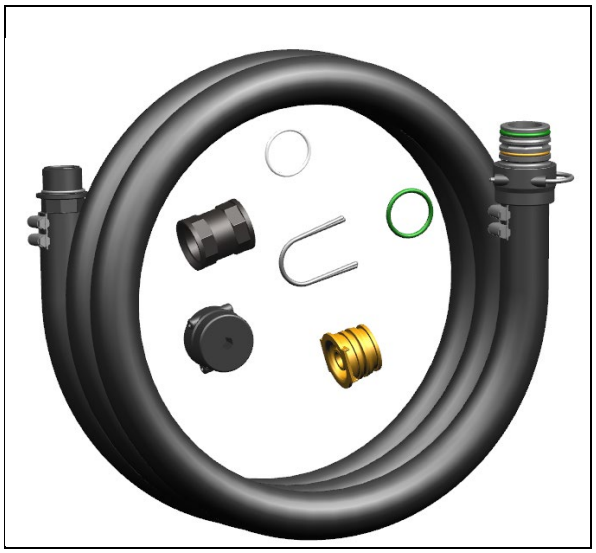

Pump test - test of pump performance (delivery capacity, pressure)

1. Lift and secure booms.
2. Take the pressure hose off of the pressure relief valve.

Some hoses may cover the pressure relief valve.

3. Fit the dummy cap on the pressure relief valve.
4. Mount the test hose on the pressure hose.
5. Mount the test hose on the measuring device.
6. Perform the test.

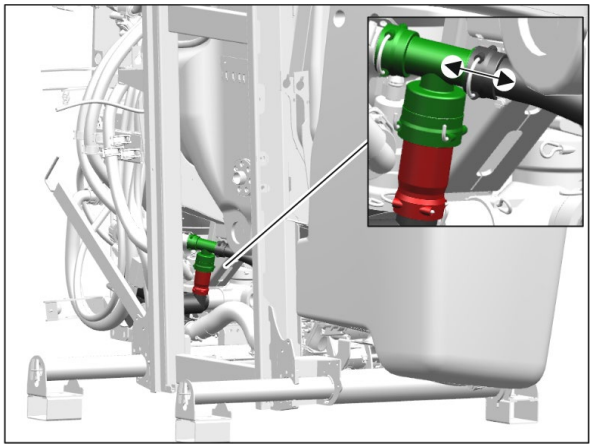

Flow meter test

boom part width section chest

1. Loosen the union nut (1) behind the flow meter.
2. Fasten the plug-in socket (order no. 919345) with the union nut and connect it to the testing device.
3. Switch on spraying.

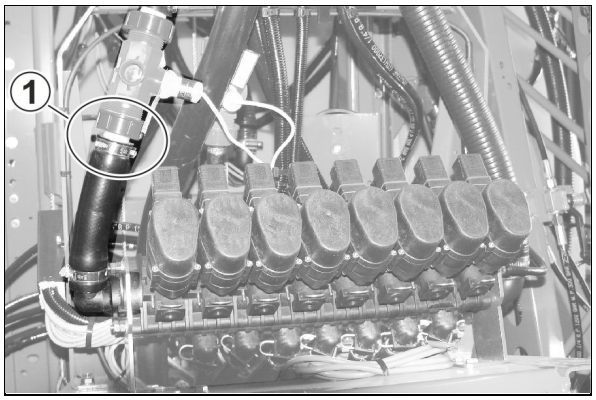

DUS pro single nozzle control

1. Loosen the union nut (1) behind the flow meter.
2. Fasten the plug-in socket (order no. 919345) with the union nut and connect it to the testing device.
3. Switch on spraying.

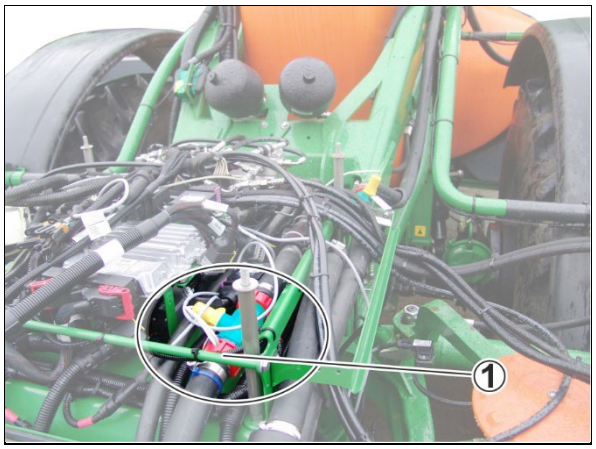

Pressure gauge test

Boom part width section chest

1. Remove one spray line from a part-width section valve and seal it with the blind hose (order no. 1166060).
2. Connect the pressure gauge connection to a part width section valve with the help of the turned socket.
3. Screw the check gauge 1/4 of an inch into the inside thread.
4. Switch on spraying

DUS pro single nozzle control

1. Disconnect the return line (1) beside the pressure sensor and seal it with the blind hose (order no. 1166060).
2. Connect the pressure gauge connection (order no. 7107000) to the spray line (2).
3. Screw the check gauge 1/4 of an inch into the inside thread.
4. Switch on spraying.

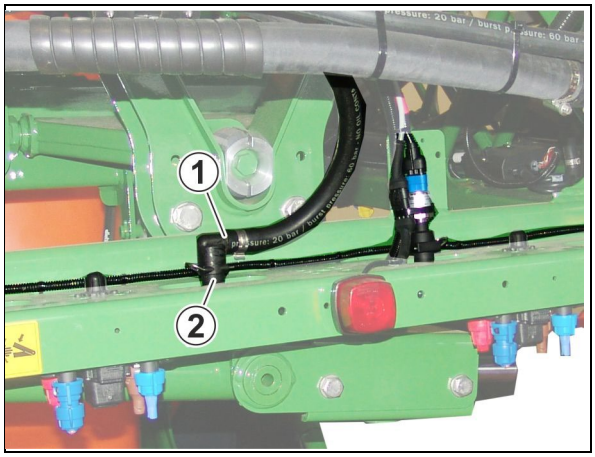

14.14 Upper and lower link pins check

DANGER!

Risk of contusions, catching, and knocks when the implement unexpectedly releases from the tractor!

Replace damaged top link pins and lower link pins immediately for road traffic safety reasons.

Test criteria for top link pins and lower link pins:

- Visual check for cracks
- Visual check for fractures
- Visual check for permanent deformations
- Visual check and measurements for wear. The permissible wear is 2 mm.
- Visual check for wear on the ball sleeves
- If applicable: check the fastening bolts for tightness

If a wear criterion is met, replace the top link pin or lower link pin.

14.1 Screw tightening torques

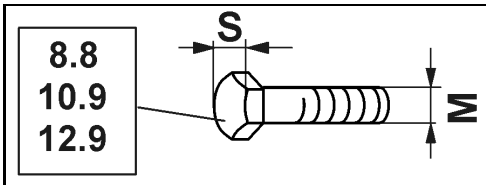

M	S	8.8		10.9		12.9	
		Ft-lb	Nm	Ft-lb	Nm	Ft-lb	Nm
M 8	13	18.5	25	25.8	35	30.2	41
M 8x1		19.9	27	28	38	30.2	41
M 10	16 (17)	36	49	51	69	61	61
M 10x1		38	52	54	73	65	65
M 12	18 (19)	63	86	89	120	107	107
M 12x1.5		66	90	92	125	111	111
M 14	22	100	135	140	190	170	170
M 14x1.5		111	150	155	210	184	184
M 16	24	155	210	221	300	262	262
M 16x1.5		166	225	232	315	280	280
M 18	27	214	290	299	405	358	358
M 18x1.5		240	325	339	460	406	406
M 20	30	302	410	428	580	509	509
M 20x1.5		339	460	472	640	568	568
M 22	32	406	550	575	780	686	686
M 22x1.5		450	610	634	860	774	774
M 24	36	524	710	738	1000	885	885
M 24x2		575	780	811	1100	959	959
M 27	41	774	1050	1106	1500	1328	1328
M 27x2		848	1150	1180	1600	1438	1438
M 30	46	1070	1450	1475	200	1770	1770
M 30x2		1180	1600	1660	2250	1991	1991

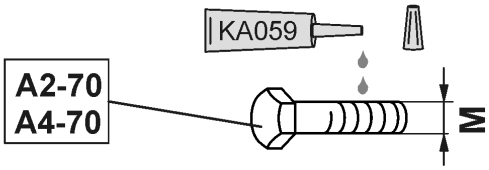

M		M4	M5	M6	M8	M10	M12	M14	M16	M18	M20	M22	M24
	Ft-lb	1.8	3.6	6.2	15.2	30	52	82.6	128.3	178.5	252.2	346.7	434.4
	Nm	2.4	4.9	8.4	20.6	40.7	70.5	112	174	242	342	470	589

Coated bolts have different tightening torques.

Observe the specific data for tightening torques in the maintenance section.

14.2 Disposing of the field sprayer

Carefully clean the whole field sprayer (inside and out) before disposing of the field sprayer.

The following components are eligible for energy recovery*: spray liquid tank, induction bowl, flushing water tank, fresh water tank, hoses and plastic fittings.

Metal parts can be scrapped.

Follow the statutory requirements for each individual material.

* Energy recovery

is the process of reclaiming the energy contained in plastics by burning them and using the energy released to generate electricity and/or steam or to supply process heat. Energy recovery is suitable for mixed and contaminated plastics, in particular for any plastics which have come into contact with pollutants.

15 Liquid circuit

Number	Description
BWA010	Spray line pressure
BWA011	Spray line flow sensor
BWA020	Return flow sensor
BWA090	Spray liquid tank fill level
BWA091	Flushing water tank fill level
GWA001	Spray liquid pump
GWA002	Agitator pump
GWA004	Flushing water pump
KWA011	Application rate control valve
KWA020	Return flow quantity control valve
KWA040	Secondary agitator valve
KWA060	Suction tap valve
KWA071	Injector control valve
KWA072	Drain valve
KWA075	Pressure filling spray liquid tank valve
KWA076	Pressure filling flushing water tank valve
KWA085	Front tank to front valve
KWA086	Front tank to rear valve
KWA106	Valve for internal cleaning of spray liquid pump
KWA 201-211	Part-width section valve 1-11
KWA230	Pressure control valve DUS

Part-width section control:

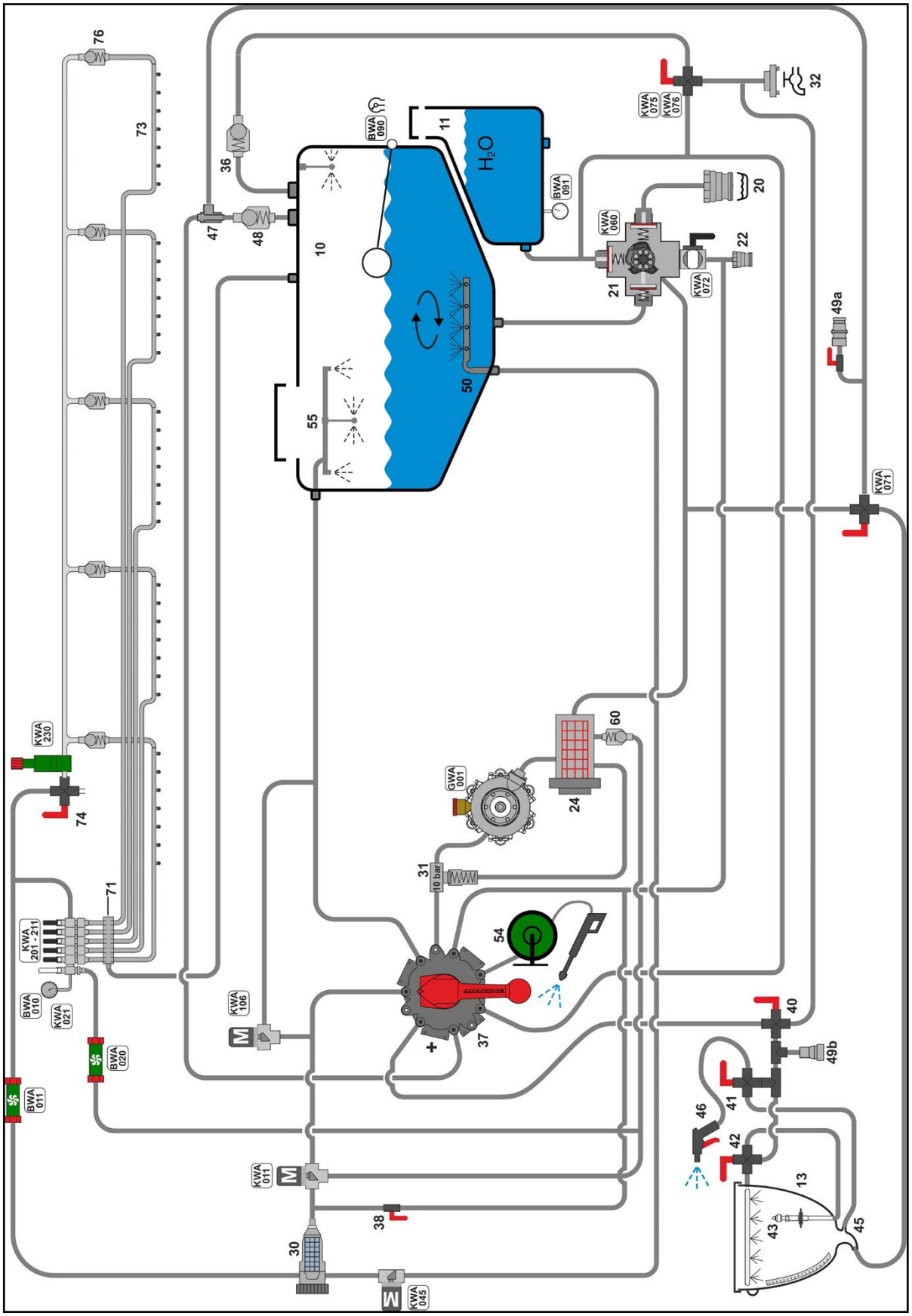

Single nozzle control / Flushing water pump

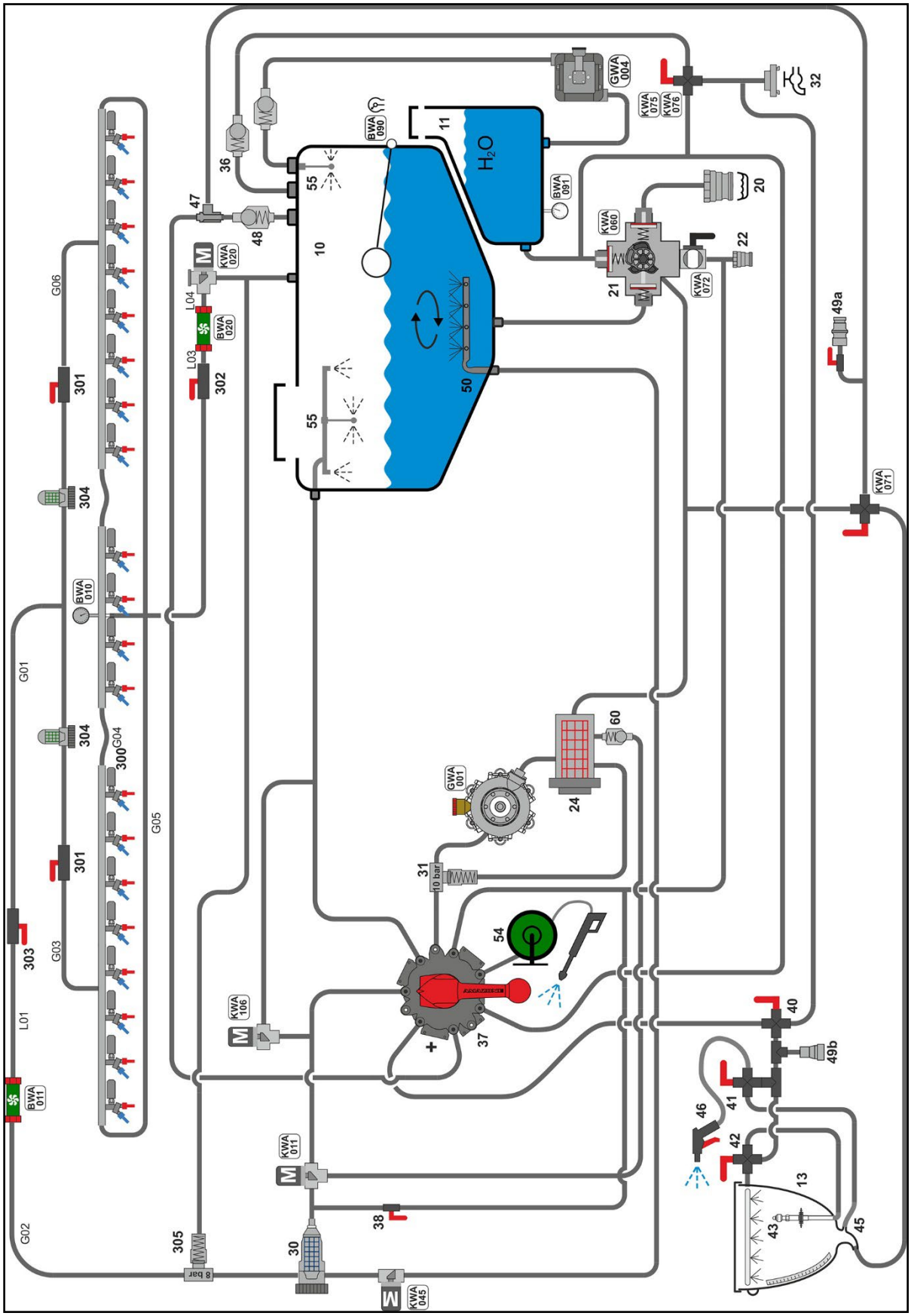

Single nozzle control / FlowControl

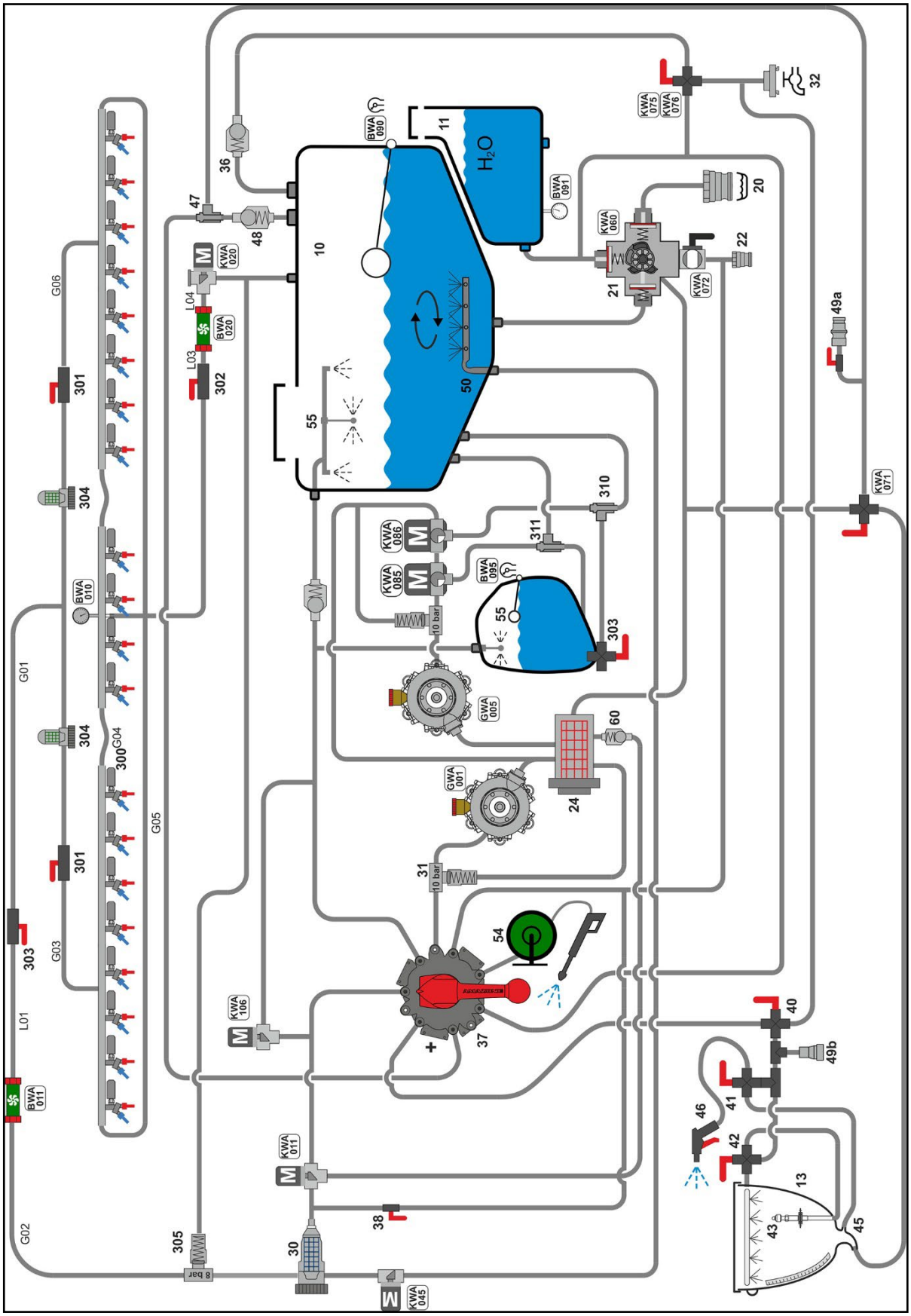

16 Spray table

16.1 Spray tables for flat-fan, anti-drift, injector and airmix nozzles, spraying height 50 cm

- The spray rates [l/ha] listed in the spray tables are only valid for water. To convert the spray rates given into AUS, multiply these by 0.88 and, for NP solutions, by 0.85.
- The illustration helps with the selection of the right nozzle type. The nozzle type is determined by
  - the intended operational speed,
  - the required spray rate and
  - the required atomisation characteristic (fine, medium or coarse-dropped) of the crop protection agent used for the crop protection measure.
- The illustration is used to
  - determine the nozzle size.
  - determine the required spray pressure.
  - determine the required individual nozzle output for calibrating the field sprayer.

Permissible pressure ranges for different nozzle types and sizes

Nozzle type	Nozzle size	Permissible pressure range [bar]	
		min. pressure	max. pressure
XRC	TeeJet	1	5
AD	Lechler	1,5	5
Air Mix	agrotop	1	6
Air Mix OC		2	4
IDK / IDKN	Lechler	1	6
ID3 0,1-0,15		3	8
ID3 0,2-0,8		2	8
AI	TeeJet	2	8
TTI		1	7
AVI Twin	agrotop	2	8
TD Hi Speed	agrotop	2	10

For further information about the nozzle characteristics, see the nozzle manufacturer's website.
www.agrotop.com / www.lechler-agri.de / www.teejet.com

Selecting the nozzle type

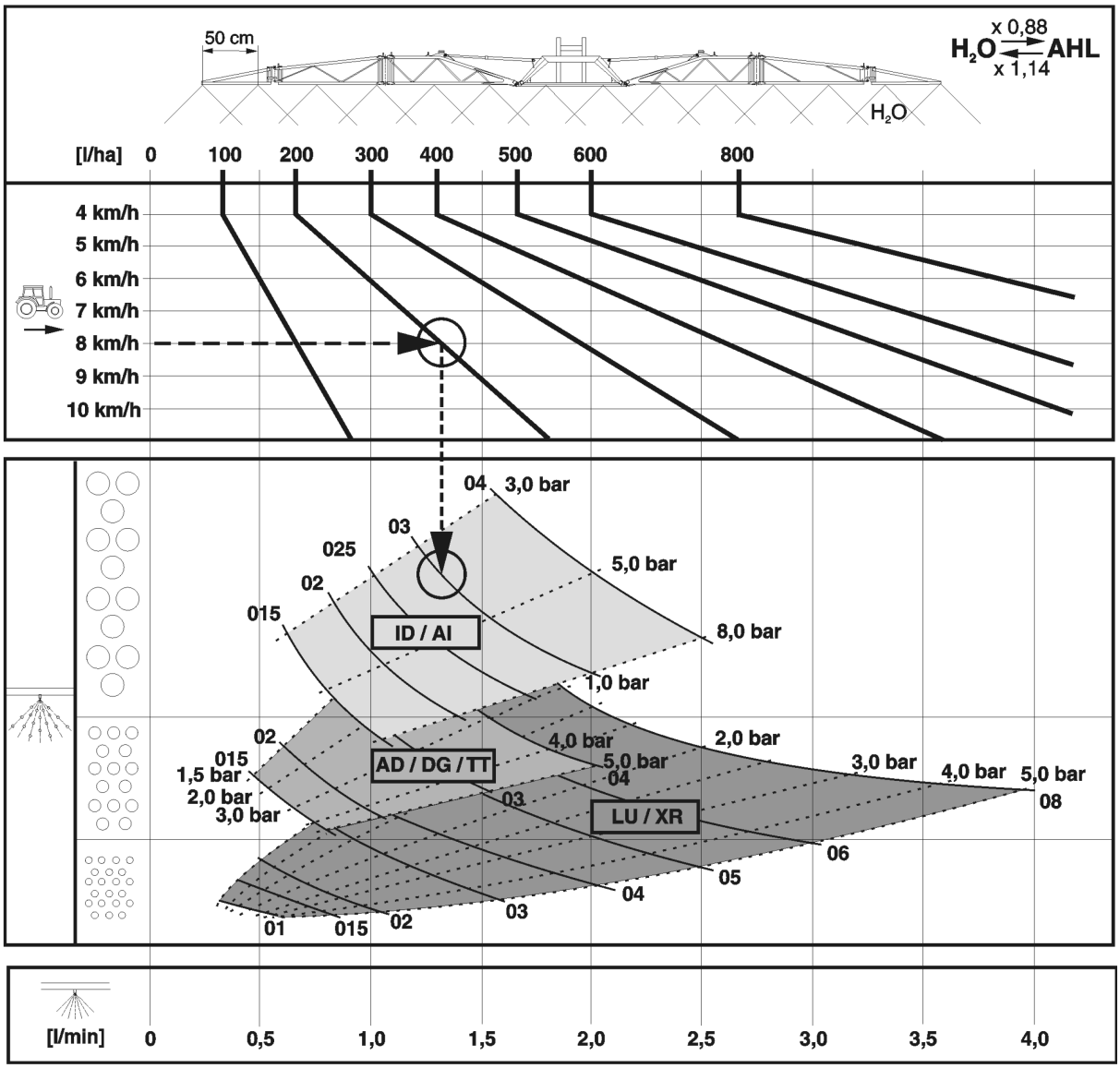

Example:

Required spray rate:	**200 l/ha**
Intended operational speed:	**8 km/h**
Required atomisation characteristic for the crop protection measure:	**coarse-dropped** (low drifting)
Required nozzle type:	?
Required nozzle size:	?
Required spray pressure:	? bar
Required individual nozzle output for calibrating the field sprayer:	? l/min

Determining the nozzle type, nozzle size, spray pressure and individual nozzle output

1. Determine the working point for the required application rate (**11gal/ac / 100 l/ha**) and the intended driving speed (**5 mph / 8 km/h**).
2. At the working point, trace a vertical line down the table. Depending on the position of the working point, this line will run through the cells for various nozzle types.
3. Select the best nozzle type for the crop protection measure in question to be carried out with reference to the required atomization characteristic (fine, medium or coarse-droplet).

→ Nozzle choice for the example cited above:

→ Nozzle type: **AI or ID**

4. Go to the Spray Table, see page **231**.
5. In the column with the intended driving speed (**5 mph / 8 km/h**), find the required application rate (**21 gal/ac / 200 l/ha**) or an application rate, which is as close as possible to the required application rate (in this case, for example, **20 ,8 gal/ac /195 l/ha**).
6. In the line with the required application rate

   (20,8 gal/ac / 195 l/ha)

   - read-off the nozzle sizes in question. Select a suitable nozzle size (e.g.**'03'**).
   - Where the nozzle size column intersects with the selected nozzle size, read-off the required spray pressure (**e.g. 54 psi / 3.7 bar**).
   - Read-off the required individual nozzle output (**0.3 gpm / 1.3 l/min**) for metering the field sprayer

Required nozzle type:	**AI / ID**
Required nozzle size:	**'03'**
Required spray pressure:	**54 psi / 3.7 bar**
Required individual nozzle output for calibrating the field sprayer:	**0.3 gpm / 1.3 l/min**

AMAZONE

19,7in

ME1550

mph	3,7	4	4,3	4,6	5	5,3	5,6	6,2	6,8	7,4	8,7	10	gpm	psi 015	02	025	03	04	05	06	08
	8,5	8	7,4	7	6,5	6	5,6						0,10	20							
	11	10	9	8,5	8	7,5	7	6,5	6				0,13	32	17,4						
	13	12	11	10	9,5	9	8,5	8	7	6,5	5,5		0,16	45	26	16					
	15	14	13	12	11	10,5	10	9	8	7,5	6,5	6	0,18	61	35	22	16				
	17	16	15	14	13	12	11,5	10	9	8,5	7	6,5	0,21	80	45	29	20				
	19	18	17	15	14	13,5	13	11,5	10,5	10	8	7	0,23	101	58	36	26	14			
	21	20	18	17	16	15	14	13	11,5	11	9	8	0,26		71	45	30	17			
	23,5	22	20	19	17	16,5	16	14	13	12	10	9	0,29		85,5	54	39	22	14,5		
	25,5	24	22	20,5	19	18	17	15	14	13	11	9,5	0,31		101	64	46	26	16		
	28	25,5	24	22	21	19,5	18,5	16,5	15	14	12	10,5	0,34			75	54	30	19	14,5	
	30	27,5	25,5	24	22,5	21	20	18	16	15	13	11	0,36			87	62	35	23	16	
	32	30	27,5	25,5	24	22,5	21	19	17,5	16	14	12	0,39			100	72,5	40	26	17	
	34	31,5	29	27	25,5	24	23	20	19	17	14,5	13	0,42				83	46,5	29	20	
	36	33,5	31	29	27	25,5	24	22	20	18	15,5	13,5	0,44				93	52	33	23	
	38,5	35,5	33	31	29	27	25,5	23	20	19	16,5	14,5	0,47				104	58	38	26	14,5
	40,5	37,5	35	32	30	28,5	27	24	22	20	17,5	15	0,50					65	42	29	16
	43	39,5	36,5	34	32	30	28,5	25,5	23	21	18	16	0,52					71	46	32	17
	45	41,5	38,5	36	34	32	30	27	24,5	22,5	19	17	0,55					78	51	35	20
	47	43,5	40	37,5	35	33	31	28	25,5	23,5	20	17,5	0,58					87	55	39	22
	49	45,5	42	39	37	35	33	29,5	27	24,5	21	18,5	0,60					94	61	42	23
	51	47	44	41	38,5	36	34	31	28	25,5	22	19	0,63					103	67	46	26
	53,5	49	46	43	40	38	35,5	32	29	27	23	20	0,66						72,5	49	27,5
	56	51	47,5	44,5	42	39	37	33	30	28	24	21	0,68						78	54	30,5
	58	53	49,5	46	43	41	38,5	34,5	31,5	29	25	22	0,71						84	58	33
	60	55	51	48	45	42	40	36	32,5	30	25,5	22,5	0,73						90	62	35
	62	57	53	49,5	46,5	44	41	37	34	31	26,5	23	0,76						97	67	38
	64	59	55	51	48	45	43	38,5	35	32	27,5	24	0,79						103	72	40,5
	66	61	57	53	50	47	44	40	36	33	28,5	25	0,81								43,5
	68	63	58,5	55	51	48	45,5	41	37	34	29	25,5	0,84								46,5
	70,5	65	60,5	56,5	53	50	47	42	38,5	35	30	26,5	0,87								49
	73	67	62	58	55	51	48,5	43,5	39,5	36	31	27	0,89								52
	75	69	64	60	56	53	50	45	41	37,5	32	28	0,92								55
	77	71	66	61,5	58	54	51	46	42	38,5	33	29	0,95								58
	79	73	68	63	59	56	53	47,5	43	39,5	34	30	0,97								62
					61	57,5	54	49	44	40	35	30,5	1,00								65
					62,5	59	56	50	45,5	42	36	31	1,03								68
					64	60	57	51	46,5	43	37	32	1,05								72,5

H_2O x 1,14 x 0,88 AHL

LU / XR	14,5 - 72,5 psi
AD	22 - 87 psi
ID / AI	29 - 116
IDK / Air Mix	14,5 - 87 psi
TTI	14,5 - 101,5 psi

16.2 Spraying nozzles for liquid manure

Nozzle type	Manufacturer	Permissible pressure range			
		Min. pressure		Max. pressure	
		psi	bar	psi	bar
3- jet	agrotop	29	2	116	8
7- hole	TeeJet	21.75	1.5	58	4
FD	Lechler	21.75	1.5	58	4
Drag hose	AMAZONE	14.5	1	58	4

16.3 AMAZONE spray tables - imperial system in accordance with ANSI standard

The tables below must be used for countries with the imperial system!

16.3.1 Spray table for 3-ray nozzles, spraying height 120 cm

AMAZONE - spray table for 3-ray nozzles (yellow)

Pressure	Nozzle output Per metering disk		Spray rate AUS [lb/ac]								
	Water	AUS	3.73	4.35	4.97	5.59	6.21	6.84	7.46	8.7	9.94
[psi]	[gal/ac]	[gal/ac]					mph				
14.5	0.10	0.08	**6.8**	**5.9**	**5.1**	**4.6**	**4.2**	**3.7**	**3.4**	**3.0**	**2.6**
17.4	0.10	0.09	**7.4**	**6.4**	**5.6**	**5.0**	**4.5**	**4.1**	**3.7**	**3.2**	**2.8**
21.8	0.12	0.10	**8.3**	**7.2**	**6.3**	**5.7**	**5.0**	**4.6**	**4.2**	**3.6**	**3.2**
26.1	0.13	0.11	**9.1**	**7.8**	**6.8**	**6.1**	**5.5**	**5.0**	**4.6**	**4.0**	**3.4**
29.0	0.13	0.12	**9.4**	**8.0**	**7.1**	**6.3**	**5.7**	**5.1**	**4.7**	**4.1**	**3.5**
31.9	0.14	0.12	**9.8**	**8.3**	**7.4**	**6.6**	**5.9**	**5.3**	**4.9**	**4.2**	**3.7**
36.3	0.15	0.13	**10.5**	**9.0**	**7.9**	**7.1**	**6.1**	**5.8**	**5.2**	**5.6**	**4.0**
40.6	0.15	0.14	**11.0**	**9.4**	**8.2**	**7.4**	**6.6**	**6.0**	**5.6**	**4.7**	**4.2**
43.5	0.16	0.14	**11.3**	**9.7**	**8.6**	**7.6**	**6.8**	**6.2**	**5.7**	**4.9**	**4.3**

AMAZONE - Spray table for 3-ray nozzles (red)

Pressure	Nozzle output Per metering disk		Spray rate AUS [lb/ac]								
	Water	AUS	3,73	4,35	4,97	5,59	6,21	6,84	7,46	8,7	9,94
[psi]	[gal/ac]	[gal/ac]					mph				
14,5	0,16	0,14	**11,5**	**9,9**	**8,7**	**7,7**	**6,9**	**6,3**	**5,8**	**5,0**	**4,4**
17,4	0,18	0,16	**12,6**	**10,8**	**9,4**	**8,3**	**7,5**	**6,8**	**6,3**	**5,5**	**4,7**
21,8	0,20	0,17	**14,1**	**12,2**	**10,6**	**9,4**	**8,4**	**7,7**	**7,1**	**6,1**	**5,3**
26,1	0,21	0,18	**14,8**	**12,7**	**11,1**	**9,8**	**8,9**	**8,1**	**7,4**	**6,4**	**5,6**
29,0	0,21	0,19	**15,2**	**13,0**	**11,4**	**10,2**	**9,1**	**8,3**	**7,6**	**6,5**	**5,8**
31,9	0,22	0,20	**15,7**	**13,5**	**11,9**	**10,5**	**9,4**	**8,6**	**7,9**	**6,7**	**6,0**
36,3	0,24	0,21	**16,6**	**14,2**	**12,5**	**11,1**	**9,9**	**9,0**	**8,3**	**7,2**	**6,3**
40,6	0,25	0,22	**17,4**	**15,0**	**13,0**	**11,7**	**10,5**	**9,3**	**8,8**	**7,5**	**6,5**
43,5	0,25	0,22	**18,0**	**15,4**	**13,5**	**12,0**	**10,8**	**9,8**	**9,0**	**7,7**	**6,7**

AMAZONE - Spray table for 3-ray nozzles (blue)

Pres-sure	Nozzle output Per metering disk		Spray rate AUS [lb/ac]								
	Water	AUS	3,73	4,35	4,97	5,59	6,21	6,84	7,46	8,7	9,94
[psi]	[gal/ac]	[gal/ac]					mph				
14,5	0,23	0,20	**16,3**	**13,9**	**12,2**	**10,8**	**9,7**	**8,9**	**8,1**	**6,9**	**6,1**
17,4	0,25	0,22	**17,7**	**15,2**	**13,3**	**11,8**	**10,6**	**9,7**	**8,9**	**7,6**	**6,6**
21,8	0,28	0,25	**19,9**	**17,0**	**15,0**	**13,3**	**12,0**	**10,9**	**9,9**	**8,6**	**7,5**
26,1	0,29	0,26	**21,0**	**17,9**	**15,7**	**14,0**	**12,5**	**11,4**	**10,5**	**9,0**	**7,9**
29,0	0,30	0,27	**21,6**	**18,5**	**16,3**	**14,4**	**12,9**	**11,8**	**10,8**	**9,3**	**8,1**
31,9	0,32	0,28	**22,7**	**19,5**	**17,0**	**15,1**	**13,6**	**12,4**	**11,3**	**9,7**	**8,6**
36,3	0,33	0,30	**23,9**	**20,5**	**18,0**	**15,9**	**14,4**	**13,0**	**12,0**	**10,3**	**9,0**
40,6	0,35	0,31	**25,0**	**21,5**	**18,8**	**16,7**	**15,1**	**13,7**	**12,5**	**10,8**	**9,4**
43,5	0,36	0,32	**25,7**	**22,0**	**19,2**	**17,1**	**15,4**	**14,0**	**12,8**	**11,0**	**9,6**

AMAZONE - Spray table for 3-ray nozzles (white)

Pres-sure	Nozzle output Per metering disk		Spray rate AUS [lb/ac]								
	Water	AUS	3,73	4,35	4,97	5,59	6,21	6,84	7,46	8,7	9,94
[psi]	[gal/ac]	[gal/ac]					mph				
14,5	0,31	0,27	**22,0**	**18,9**	**16,6**	**14,6**	**13,3**	**22,8**	**11,0**	**9,5**	**8,3**
17,4	0,34	0,30	**23,9**	**20,5**	**18,0**	**15,9**	**14,3**	**23,7**	**12,0**	**10,3**	**9,0**
21,8	0,38	0,33	**26,9**	**23,2**	**20,3**	**18,0**	**16,1**	**14,8**	**13,5**	**11,7**	**10,2**
26,1	0,41	0,36	**29,6**	**25,3**	**22,1**	**19,7**	**17,7**	**16,1**	**14,9**	**12,7**	**11,1**
29,0	0,43	0,38	**31,0**	**26,6**	**23,2**	**20,6**	**18,6**	**16,9**	**15,5**	**13,4**	**11,7**
31,9	0,46	0,41	**32,8**	**28,1**	**24,6**	**21,8**	**19,8**	**18,0**	**16,5**	**14,1**	**12,3**
36,3	0,49	0,43	**34,7**	**29,8**	**26,1**	**23,1**	**20,8**	**19,0**	**17,4**	**15,0**	**13,0**
40,6	0,51	0,45	**36,6**	**31,3**	**27,4**	**24,4**	**21,9**	**20,0**	**18,3**	**15,7**	**13,7**
43,5	0,53	0,47	**38,1**	**32,6**	**28,5**	**25,3**	**22,9**	**20,7**	**19,0**	**16,4**	**14,3**

16.3.2 Spray table for 7-hole nozzle

AMAZONE Spray table for 7- hole nozzle SJ7-02VP (yellow)

Pres-sure	Nozzle output Per metering disk		Spray rate AUS [l/ha]								
	Water	AUS	3,73	4,35	4,97	5,59	6,21	6,84	7,46	8,7	9,94
[psi]	[gal/ac]	[gal/ac]					mph				
21,8	0,15	0,13	**10,5**	**9,0**	**7,9**	**6,9**	**6,3**	**5,7**	**5,2**	**4,5**	**4,0**
29,0	0,17	0,15	**12,2**	**10,5**	**9,2**	**8,1**	**7,3**	**6,6**	**6,1**	**5,2**	**4,6**
36,3	0,19	0,17	**13,7**	**11,8**	**10,3**	**9,1**	**8,2**	**7,5**	**6,8**	**5,9**	**5,1**
43,5	0,21	0,19	**15,2**	**13,0**	**11,4**	**10,2**	**9,1**	**8,2**	**7,6**	**6,5**	**5,7**
50,8	0,22	0,20	**16,0**	**13,8**	**12,1**	**10,7**	**9,6**	**8,8**	**8,0**	**6,8**	**6,0**
58,0	0,25	0,22	**17,5**	**15,1**	**13,1**	**11,7**	**10,5**	**9,5**	**8,8**	**7,5**	**6,6**

AMAZONE Spray table for 7- hole nozzle SJ7-02VP (blue)

Pres-sure	Nozzle output Per metering disk		Spray rate AUS [l/ha]								
	Water	AUS	3,73	4,35	4,97	5,59	6,21	6,84	7,46	8,7	9,94
[psi]	[gal/ac]	[gal/ac]					mph				
21,8	0,23	0,20	**16,5**	**14,1**	**12,4**	**11,0**	**9,8**	**9,0**	**8,2**	**7,1**	**6,2**
29,0	0,26	0,23	**18,8**	**16,1**	**14,1**	**12,5**	**11,3**	**10,3**	**9,4**	**8,0**	**7,1**
36,3	0,29	0,26	**20,7**	**17,7**	**15,6**	**13,8**	**12,4**	**11,3**	**10,4**	**8,9**	**7,8**
43,5	0,31	0,27	**22,2**	**19,0**	**16,7**	**14,9**	**13,4**	**12,1**	**11,1**	**9,5**	**8,3**
50,8	0,34	0,30	**23,9**	**20,5**	**18,0**	**15,9**	**14,3**	**13,0**	**12,0**	**10,3**	**9,0**
58,0	0,35	0,31	**24,8**	**21,3**	**18,6**	**16,6**	**14,9**	**13,6**	**12,4**	**10,6**	**9,3**

AMAZONE Spray table for 7-hole nozzle SJ7-04VP (red)

Pres-sure	Nozzle output Per metering disk		Spray rate AUS [l/ha]								
	Water	AUS	3,73	4,35	4,97	5,59	6,21	6,84	7,46	8,7	9,94
[psi]	[gal/ac]	[gal/ac]					mph				
21,8	0,31	0,27	**22,2**	**19,0**	**16,7**	**14,9**	**13,4**	**12,1**	**11,1**	**9,5**	**8,3**
29,0	0,35	0,31	**25,2**	**21,6**	**18,9**	**16,8**	**15,2**	**13,8**	**12,6**	**10,8**	**9,5**
36,3	0,38	0,34	**27,4**	**23,4**	**20,5**	**18,3**	**16,5**	**15,0**	**13,7**	**11,8**	**10,3**
43,5	0,41	0,36	**29,3**	**25,1**	**22,0**	**19,6**	**17,5**	**15,9**	**14,6**	**12,5**	**11,0**
50,8	0,44	0,39	**31,5**	**27,0**	**23,6**	**21,0**	**18,9**	**17,2**	**15,7**	**13,5**	**11,8**
58,0	0,45	0,40	**32,5**	**27,9**	**24,4**	**21,7**	**19,5**	**17,7**	**16,3**	**13,9**	**12,2**

AMAZONE Spray table for 7- hole nozzle SJ7-04VP (brown)

Pres-sure	Nozzle output Per metering disk		Spray rate AUS [l/ha]								
	Water	AUS	3,73	4,35	4,97	5,59	6,21	6,84	7,46	8,7	9,94
[psi]	[gal/ac]	[gal/ac]					mph				
21,8	0,39	0,35	**28,2**	**24,2**	**21,2**	**18,8**	**16,9**	**15,4**	**14,1**	**12,1**	**10,6**
29,0	0,44	0,39	**31,9**	**27,3**	**23,9**	**21,3**	**19,1**	**17,4**	**15,9**	**13,7**	**12,0**
36,3	0,48	0,43	**34,6**	**29,7**	**26,0**	**23,1**	**20,7**	**18,9**	**17,3**	**14,9**	**13,0**
43,5	0,52	0,46	**37,0**	**31,8**	**27,8**	**24,7**	**22,2**	**20,2**	**18,5**	**15,8**	**13,9**
50,8	0,56	0,49	**40,0**	**34,3**	**30,0**	**26,6**	**23,9**	**21,8**	**20,0**	**17,1**	**15,0**
58,0	0,57	0,50	**40,8**	**35,0**	**30,7**	**27,3**	**24,5**	**22,2**	**20,4**	**17,5**	**15,3**

AMAZONE Spray table for 7- hole nozzle SJ7-04VP (gray)

Pres-sure	Nozzle output Per metering disk		Spray rate AUS [l/ha]								
	Water	AUS	3,73	4,35	4,97	5,59	6,21	6,84	7,46	8,7	9,94
[psi]	[gal/ac]	[gal/ac]					mph				
21,8	0,47	0,41	**33,6**	**28,8**	**25,2**	**22,3**	**20,1**	**18,3**	**16,8**	**14,4**	**12,6**
29,0	0,53	0,47	**38,1**	**32,6**	**28,5**	**25,3**	**22,9**	**20,7**	**19,0**	**16,4**	**14,3**
36,3	0,58	0,51	**41,5**	**35,6**	**31,1**	**27,7**	**24,9**	**22,7**	**20,7**	**17,7**	**15,6**
43,5	0,62	0,55	**44,5**	**38,2**	**33,4**	**29,6**	**26,7**	**24,3**	**22,2**	**19,0**	**16,7**
58,0	0,69	0,61	**60,1**	**42,3**	**37,1**	**32,9**	**29,6**	**26,9**	**24,7**	**21,2**	**18,5**

AMAZONE Spray table for 7- hole nozzle SJ7-04VP (white)

Pres-sure	Nozzle output Per metering disk		Spray rate AUS [l/ha]								
	Water	AUS	3,73	4,35	4,97	5,59	6,21	6,84	7,46	8,7	9,94
[psi]	[gal/ac]	[gal/ac]					mph				
21,8	0,60	0,53	**43,2**	**37,0**	**32,4**	**28,8**	**25,9**	**23,5**	**21,6**	**18,5**	**16,3**
29,0	0,70	0,62	**50,2**	**43,1**	**37,7**	**33,5**	**30,1**	**27,4**	**25,1**	**21,5**	**18,8**
36,3	0,78	0,69	**55,6**	**47,7**	**41,7**	**37,1**	**33,4**	**30,4**	**27,8**	**23,8**	**20,8**
43,5	0,83	0,74	**59,7**	**51,1**	**44,8**	**39,8**	**35,8**	**32,5**	**29,8**	**25,6**	**22,3**
58,0	0,91	0,81	**65,4**	**56,1**	**49,1**	**43,6**	**39,2**	**35,7**	**32,7**	**28,0**	**24,6**

16.3.3 Spray table for FD nozzles

AMAZONE spray table for FD-04 nozzle

Pres-sure	Nozzle output Per metering disk		Spray rate AUS [lb/ac]								
	Water	AUS	3,73	4,35	4,97	5,59	6,21	6,84	7,46	8,7	9,94
[psi]	[gal/ac]	[gal/ac]					[mph]				
21,8	0,30	0,26	**21,4**	**18,3**	**16,0**	**14,2**	**12,8**	**11,7**	**10,7**	**9,2**	**8,0**
29,0	0,35	0,30	**24,6**	**21,1**	**18,5**	**16,4**	**14,8**	**13,4**	**12,3**	**10,6**	**9,2**
36,3	0,39	0,34	**27,6**	**23,6**	**20,7**	**18,4**	**16,6**	**15,1**	**13,8**	**11,9**	**10,4**
43,5	0,42	0,37	**30,1**	**25,8**	**22,6**	**20,1**	**18,1**	**16,5**	**15,1**	**12,9**	**11,3**
58,0	0,49	0,43	**34,9**	**29,8**	**26,2**	**23,2**	**21,0**	**19,0**	**17,4**	**15,0**	**13,0**

AMAZONE Spray table for FD-05- nozzle

Pres-sure	Nozzle output Per metering disk		Spray rate AUS [lb/ac]								
	Water	AUS	3,73	4,35	4,97	5,59	6,21	6,84	7,46	8,7	9,94
[psi]	[gal/ac]	[gal/ac]					[mph]				
21,8	0,37	0,33	**26,5**	**22,8**	**19,9**	**17,6**	**15,9**	**14,4**	**13,3**	**11,3**	**9,9**
29,0	0,43	0,38	**30,8**	**26,4**	**23,1**	**20,5**	**18,5**	**16,8**	**15,4**	**13,1**	**11,5**
36,3	0,48	0,43	**34,4**	**29,5**	**25,9**	**23,0**	**20,6**	**18,8**	**17,2**	**14,8**	**12,9**
43,5	0,53	0,46	**37,6**	**32,3**	**28,2**	**25,1**	**22,6**	**20,5**	**18,8**	**16,1**	**14,1**
58,0	0,61	0,54	**43,4**	**37,2**	**32,6**	**29,0**	**26,1**	**23,6**	**21,7**	**18,6**	**16,3**

AMAZONE Spray table for FD-06- nozzle

Pres-sure	Nozzle output Per metering disk		Spray rate AUS [lb/ac]								
	Water	AUS	3,73	4,35	4,97	5,59	6,21	6,84	7,46	8,7	9,94
[psi]	[gal/ac]	[gal/ac]					[mph]				
21,8	0,45	0,39	**31,9**	**27,3**	**23,9**	**21,3**	**19,1**	**17,4**	**15,9**	**13,7**	**12,0**
29,0	0,52	0,45	**36,8**	**31,5**	**27,6**	**24,5**	**22,0**	**20,1**	**18,4**	**15,7**	**13,8**
36,3	0,58	0,51	**41,3**	**35,4**	**31,0**	**27,5**	**24,8**	**22,6**	**20,6**	**17,6**	**15,5**
43,5	0,63	0,56	**45,1**	**38,7**	**33,9**	**30,1**	**27,0**	**24,6**	**22,6**	**19,4**	**16,9**
58,0	0,73	0,64	**52,2**	**44,7**	**39,1**	**34,7**	**31,3**	**28,4**	**26,1**	**22,3**	**19,6**

AMAZONE Spray table for FD-08- nozzle

Pres-sure	Nozzle output Per metering disk		Spray rate AUS [lb/ac]								
	Water	AUS	3,73	4,35	4,97	5,59	6,21	6,84	7,46	8,7	9,94
[psi]	[gal/ac]	[gal/ac]	[mph]								
21,8	0,60	0,53	**42,5**	**36,5**	**32,0**	**28,3**	**25,6**	**23,2**	**21,3**	**18,3**	**15,9**
29,0	0,69	0,61	**49,2**	**42,1**	**36,9**	**32,8**	**29,5**	**26,8**	**24,6**	**21,1**	**18,5**
36,3	0,77	0,68	**55,0**	**47,1**	**41,3**	**36,7**	**32,9**	**29,9**	**27,5**	**23,5**	**20,6**
43,5	0,85	0,74	**60,2**	**51,6**	**45,1**	**40,1**	**36,1**	**32,8**	**30,1**	**25,8**	**22,6**
58,0	0,98	0,86	**69,5**	**59,5**	**52,2**	**46,3**	**41,7**	**38,0**	**34,7**	**29,8**	**26,1**

AMAZONE Spray table for FD-10- nozzle

Pres-sure	Nozzle output Per metering disk		Spray rate AUS [l/ha]								
	Water	AUS	6	7	8	9	10	11	12	14	16
[psi]	[gal/ac]	[gal/ac]	**[lb/ac]**								
1,5	2,83	2,49	**498**	**427**	**374**	**332**	**299**	**272**	**249**	**249**	**187**
2,0	3,27	2,88	**576**	**494**	**432**	**384**	**345**	**314**	**288**	**288**	**216**
2,5	3,65	3,21	**642**	**551**	**482**	**429**	**385**	**350**	**321**	**321**	**241**
3,0	4,00	3,52	**704**	**604**	**528**	**469**	**422**	**384**	**352**	**352**	**264**
4,0	4,62	4,07	**813**	**697**	**610**	**542**	**488**	**444**	**407**	**407**	**305**

16.3.4 Spray table for drag hose unit

AMAZONE spray table with metering disk 4916-26, (dia. 0,65 mm)

Pres-sure	Nozzle output Per metering disk		Spray rate AUS [lb/ac]								
	Water	AUS	3,73	4,35	4,97	5,59	6,21	6,84	7,46	8,7	9,94
[psi]	[gal/ac]	[gal/ac]	[mph]								
14,5	0,05	0,05	**7,6**	**6,5**	**5,7**	**5,0**	**4,6**	**4,0**	**3,8**	**3,3**	**2,9**
17,4	0,06	0,05	**8,3**	**7,2**	**6,2**	**5,6**	**5,0**	**4,6**	**4,2**	**3,6**	**3,1**
21,8	0,06	0,06	**9,1**	**7,8**	**6,8**	**6,1**	**5,5**	**5,0**	**4,6**	**4,0**	**3,4**
26,1	0,07	0,06	**9,8**	**8,4**	**7,4**	**6,5**	**5,9**	**5,3**	**4,9**	**4,3**	**3,7**
29,0	0,07	0,07	**10,6**	**9,1**	**7,9**	**7,1**	**6,4**	**5,8**	**5,3**	**4,6**	**4,0**
31,9	0,08	0,07	**11,0**	**9,4**	**8,2**	**7,3**	**6,6**	**6,0**	**5,6**	**4,7**	**4,2**
36,3	0,08	0,07	**11,8**	**10,0**	**8,8**	**7,8**	**7,1**	**6,4**	**5,9**	**5,0**	**4,4**
40,6	0,08	0,07	**12,1**	**10,4**	**9,1**	**8,1**	**7,3**	**6,6**	**6,1**	**5,2**	**4,6**
43,5	0,09	0,08	**12,8**	**11,0**	**9,6**	**8,6**	**7,7**	**7,1**	**6,4**	**5,6**	**4,8**
50,8	0,10	0,08	**13,6**	**11,7**	**10,3**	**9,1**	**8,2**	**7,5**	**6,8**	**5,9**	**5,1**
58,0	0,10	0,09	**14,8**	**12,6**	**11,1**	**9,8**	**8,9**	**8,1**	**7,4**	**6,3**	**5,6**

AMAZONE spray table with metering disk 4916-32, (dia. 0,8 mm)

Pres-sure	Nozzle output Per metering disk		Spray rate AUS [lb/ac]								
	Water	AUS	3,73	4,35	4,97	5,59	6,21	6,84	7,46	8,7	9,94
[psi]	[gal/ac]	[gal/ac]	[mph]								
14,5	0,08	0,07	**11,8**	**10,0**	**8,8**	**7,8**	**7,1**	**6,4**	**5,9**	**5,0**	**4,4**
17,4	0,09	0,08	**12,8**	**11,0**	**9,6**	**8,6**	**7,7**	**7,1**	**6,4**	**5,6**	**4,8**
21,8	0,10	0,09	**14,4**	**12,3**	**10,8**	**9,6**	**8,7**	**7,9**	**7,3**	**6,2**	**5,5**
26,1	0,11	0,10	**15,5**	**13,3**	**11,7**	**10,4**	**9,3**	**8,4**	**7,8**	**6,6**	**5,9**
29,0	0,11	0,10	**16,3**	**13,9**	**12,2**	**10,8**	**9,8**	**8,9**	**8,1**	**6,9**	**6,1**
31,9	0,12	0,11	**17,0**	**14,6**	**12,7**	**11,3**	**10,3**	**9,3**	**8,6**	**7,4**	**6,4**
36,3	0,13	0,11	**18,2**	**15,6**	**13,6**	**12,1**	**10,9**	**9,9**	**9,1**	**7,8**	**6,8**
40,6	0,13	0,12	**19,4**	**16,6**	**14,4**	**12,8**	**11,7**	**10,5**	**9,7**	**8,3**	**7,3**
43,5	0,14	0,12	**20,1**	**17,2**	**15,1**	**13,4**	**12,1**	**11,0**	**10,0**	**8,7**	**7,6**
50,8	0,15	0,13	**21,6**	**18,5**	**16,1**	**14,4**	**12,9**	**11,8**	**10,8**	**9,3**	**8,1**
58,0	0,16	0,14	**23,1**	**19,8**	**17,3**	**15,4**	**13,9**	**12,6**	**11,5**	**9,9**	**8,7**

AMAZONE spray table with metering disk 4916-39, (dia. 1,0 mm) (factory-standard)

Pres-sure	Nozzle output Per metering disk		Spray rate AUS [lb/ac]								
	Water	AUS	3,73	4,35	4,97	5,59	6,21	6,84	7,46	8,70	9,94
[psi]	[gal/ac]	[gal/ac]	[mph]								
14,5	0,11	0,10	**16,4**	**14,0**	**12,2**	**10,8**	**9,8**	**9,0**	**8,2**	**7,1**	**6,1**
17,4	0,12	0,11	**17,9**	**15,3**	**13,3**	**11,8**	**10,7**	**9,7**	**9,0**	**7,7**	**6,6**
21,8	0,14	0,12	**20,0**	**17,1**	**15,1**	**13,5**	**12,0**	**10,9**	**10,0**	**8,6**	**7,6**
26,1	0,15	0,13	**21,8**	**18,7**	**16,5**	**14,6**	**13,0**	**12,0**	**10,9**	**9,4**	**8,2**
29,0	0,16	0,14	**23,1**	**19,8**	**17,3**	**15,4**	**13,9**	**12,6**	**11,5**	**9,9**	**8,7**
31,9	0,17	0,15	**24,3**	**20,7**	**18,2**	**16,1**	**14,5**	**13,3**	**12,2**	**10,4**	**9,1**
36,3	0,18	0,16	**25,7**	**22,0**	**19,2**	**17,1**	**15,2**	**14,1**	**12,8**	**11,0**	**9,6**
40,6	0,19	0,16	**26,8**	**23,0**	**20,2**	**18,0**	**16,1**	**14,6**	**13,5**	**11,5**	**10,2**
43,5	0,20	0,17	**28,0**	**23,9**	**21,1**	**18,7**	**16,9**	**15,3**	**14,0**	**12,0**	**10,6**
50,8	0,21	0,18	**29,9**	**25,2**	**22,5**	**19,9**	**18,0**	**16,4**	**15,0**	**12,6**	**11,2**
58,0	0,22	0,20	**32,3**	**27,7**	**24,2**	**21,5**	**19,4**	**17,6**	**16,1**	**13,9**	**12,1**

AMAZONE spray table with metering disk 4916-45, (dia. 1,2 mm)

Pres-sure	Nozzle output Per metering disk		Spray rate AUS [lb/ac]								
	Water	AUS	3,73	4,35	4,97	5,59	6,21	6,84	7,46	8,70	9,94
[psi]	[gal/ac]	[gal/ac]	[mph]								
14,5	0,23	0,20	**21,6**	**18,5**	**16,1**	**14,4**	**12,9**	**11,8**	**10,8**	**9,3**	**8,1**
17,4	0,25	0,22	**23,4**	**20,1**	**17,6**	**15,6**	**14,1**	**12,8**	**11,8**	**10,0**	**8,9**
21,8	0,28	0,25	**26,5**	**22,7**	**19,9**	**17,6**	**15,9**	**14,4**	**13,3**	**11,3**	**9,9**
26,1	0,30	0,27	**29,2**	**25,0**	**21,8**	**19,5**	**17,5**	**15,8**	**14,6**	**12,5**	**10,9**
29,0	0,32	0,29	**30,7**	**26,3**	**23,0**	**20,5**	**18,4**	**16,8**	**15,4**	**13,1**	**11,5**
31,9	0,34	0,30	**32,5**	**27,9**	**24,4**	**21,7**	**19,6**	**17,7**	**16,3**	**14,0**	**12,2**
36,3	0,36	0,31	**34,9**	**29,8**	**26,1**	**23,2**	**21,0**	**19,0**	**17,4**	**15,0**	**13,0**
40,6	0,38	0,34	**36,3**	**31,1**	**27,3**	**24,3**	**21,8**	**19,9**	**18,2**	**15,6**	**13,7**
43,5	0,39	0,34	**37,8**	**32,4**	**28,4**	**25,2**	**22,8**	**20,6**	**18,9**	**16,3**	**14,2**
50,8	0,42	0,37	**41,6**	**35,7**	**31,2**	**27,8**	**25,0**	**22,8**	**20,8**	**17,9**	**15,6**
58,0	0,45	0,40	**43,9**	**37,6**	**32,9**	**29,3**	**26,3**	**23,9**	**22,0**	**18,8**	**16,5**

AMAZONE spray table with metering disk 4916-55, (dia.1,4 mm)

Pres-sure	Nozzle output Per metering disk		Spray rate AUS [lb/ac]								
	Water	AUS	3,73	4,35	4,97	5,59	6,21	6,84	7,46	8,70	9,94
[psi]	[gal/ac]	[gal/ac]	[mph]								
14,5	0,23	0,20	**32,5**	**27,9**	**24,4**	**21,7**	**19,6**	**17,7**	**16,3**	**14,0**	**12,2**
17,4	0,25	0,22	**35,2**	**30,1**	**26,4**	**23,4**	**21,2**	**19,2**	**17,6**	**15,1**	**13,3**
21,8	0,28	0,25	**39,8**	**34,1**	**29,7**	**26,5**	**23,8**	**21,7**	**19,9**	**17,1**	**14,9**
26,1	0,30	0,27	**43,5**	**37,3**	**32,6**	**29,0**	**26,2**	**23,7**	**21,8**	**18,7**	**16,4**
29,0	0,32	0,29	**46,2**	**39,6**	**34,6**	**30,8**	**27,7**	**25,2**	**23,1**	**19,8**	**17,3**
31,9	0,34	0,30	**48,1**	**41,2**	**36,0**	**32,1**	**28,9**	**26,2**	**24,1**	**17,4**	**18,0**
36,3	0,36	0,31	**51,1**	**43,8**	**38,3**	**34,1**	**30,7**	**27,9**	**25,6**	**21,9**	**19,1**
40,6	0,38	0,34	**54,1**	**46,4**	**40,6**	**36,0**	**32,5**	**29,5**	**27,0**	**23,2**	**20,3**
43,5	0,39	0,34	**55,6**	**47,7**	**41,7**	**37,1**	**33,4**	**30,4**	**27,8**	**23,8**	**20,8**
50,8	0,42	0,37	**60,2**	**51,5**	**45,1**	**40,1**	**36,1**	**32,8**	**30,1**	**25,8**	**22,6**
58,0	0,45	0,40	**63,9**	**54,8**	**48,0**	**42,7**	**38,4**	**35,0**	**32,0**	**27,5**	**24,1**

16.3.5 Conversion table for spraying ammonium nitrate / urea solution (AUS) liquid fertilizer

(Density 0.05 lb/in [1.28 kg/l], i.e. approx. 62 lb [28 kg] N for 220 lb [100 kg] liquid fertilizer or 79 lb [36 kg] N for 26 gal [100 l] liquid fertilizer at 41 - 50°F [5 - 10°C])											
N [lb]	Sol. N [gal]	Sol. N [lb]	N [lb]	Sol. N [gal]	Sol. N [lb]	N [lb]	Sol. N [gal]	Sol. N [lb]	N [lb]	Sol. N [gal]	Sol. N [lb]
22	7.3	78.9	115	38.2	410.1	207	69.0	740.3	22	99.9	1069.2
26	8.8	94.6	119	39.6	425.5	212	70.5	762.1	26	101.4	1086.9
31	10.3	110.2	123	41.1	440.9	216	71.9	771.6	31	102.8	1102.3
35	11.8	125.9	128	42.6	457.0	220	73.4	787.9	35	104.1	1117.7
40	13.2	141.8	132	44.0	472.2	225	74.9	802.9	40	105.7	1135.4
44	14.7	157.6	137	45.5	488.8	229	75.4	819.7	44	107.3	1148.6
49	16.3	173.1	141	47.0	503.3	234	77.7	834.0	49	108.6	1166.2
53	17.6	188.7	146	48.4	520.1	238	79.3	851.0	53	110.2	1179.5
57	19.8	204.8	150	49.9	535.7	243	80.7	866.4	57	113.9	1221.4
62	20.6	220.5	154	51.4	551.2	247	82.2	881.8	62	117.6	1261.0
66	22.0	236.1	159	52.8	567.0	251	83.6	898.4	66	121.0	1298.5
71	23.5	251.8	163	54.1	582.5	256	85.1	913.4	71	124.7	1338.2
75	25.0	267.6	168	55.9	599.2	260	86.6	928.1	75	128.4	1377.9
79	26.4	283.7	172	57.2	613.5	265	88.0	943.6	79	132.1	1417.6
84	27.9	299.6	176	58.7	628.8	269	89.6	961.2	84	135.8	1455.1
88	29.3	315.3	181	60.2	645.5	273	90.9	976.6	88	139.2	1496.9
93	30.9	330.7	185	61.6	661.4	278	92.5	992.1	93	142.9	1534.4
97	32.3	346.3	190	63.0	677.9	282	94.0	1007.5	97	146.9	1574.1
101	33.8	362.2	194	64.0	692.5	287	95.4	1025.1			
106	35.2	378.1	198	66.0	709.2	291	97.0	1038.4			
110	36.7	393.7	203	67.5	723.8	295	98.3	1053.8			

16.4 AMAZONE spray tables - metric system

16.4.1 Spray table for three-ray nozzles, spraying height 120 cm

AMAZONE - Spray table for three-ray nozzles (yellow)

Pres-sure	Nozzle output		AUS spray rate (l/ha) /								
	Water	AUS	6	7	8	9	10	11	12	14	16
(bar)	(l/min)		km/h								
1,0	0,36	0,32	**64**	**55**	**48**	**43**	**39**	**35**	**32**	**28**	**24**
1,2	0,39	0,35	**69**	**60**	**52**	**47**	**42**	**38**	**35**	**30**	**26**
1,5	0,44	0,39	**78**	**67**	**59**	**53**	**47**	**43**	**39**	**34**	**30**
1,8	0,48	0,42	**85**	**73**	**64**	**57**	**51**	**47**	**43**	**37**	**32**
2,0	0,50	0,44	**88**	**75**	**66**	**59**	**53**	**48**	**44**	**38**	**33**
2,2	0,52	0,46	**92**	**78**	**69**	**62**	**55**	**50**	**46**	**39**	**35**
2,5	0,55	0,49	**98**	**84**	**74**	**66**	**57**	**54**	**49**	**52**	**37**
2,8	0,58	0,52	**103**	**88**	**77**	**69**	**62**	**56**	**52**	**44**	**39**
3,0	0,60	0,53	**106**	**91**	**80**	**71**	**64**	**58**	**53**	**46**	**40**

AMAZONE - Spray table for three-ray nozzles (red)

Pres-sure	Nozzle output		AUS spray rate (l/ha) /								
	Water	AUS	6	7	8	9	10	11	12	14	16
(bar)	(l/min)		km/h								
1.0	0.61	0.54	**108**	**93**	**81**	**72**	**65**	**59**	**54**	**47**	**41**
1.2	0.67	0.59	**118**	**101**	**88**	**78**	**70**	**64**	**59**	**51**	**44**
1.5	0.75	0.66	**132**	**114**	**99**	**88**	**79**	**72**	**66**	**57**	**50**
1.8	0.79	0.69	**138**	**119**	**104**	**92**	**83**	**76**	**69**	**60**	**52**
2.0	0.81	0.71	**142**	**122**	**107**	**95**	**85**	**78**	**71**	**61**	**54**
2.2	0.84	0.74	**147**	**126**	**111**	**98**	**88**	**80**	**74**	**63**	**56**
2.5	0.89	0.78	**155**	**133**	**117**	**104**	**93**	**84**	**78**	**67**	**59**
2.8	0.93	0.82	**163**	**140**	**122**	**109**	**98**	**87**	**82**	**70**	**61**
3.0	0.96	0.84	**168**	**144**	**126**	**112**	**101**	**92**	**84**	**72**	**63**

AMAZONE - Spray table for three-ray nozzles (blue)

Pres-sure	Nozzle output		AUS spray rate (l/ha) /								
	Water	AUS	6	7	8	9	10	11	12	14	16
(bar)	(l/min)		km/h								
1.0	0.86	0.76	**152**	**130**	**114**	**101**	**91**	**83**	**76**	**65**	**57**
1.2	0.94	0.83	**166**	**142**	**124**	**110**	**99**	**91**	**83**	**71**	**62**
1.5	1.05	0.93	**186**	**159**	**140**	**124**	**112**	**102**	**93**	**80**	**70**
1.8	1.11	0.98	**196**	**167**	**147**	**131**	**117**	**107**	**98**	**84**	**74**
2.0	1.15	1.01	**202**	**173**	**152**	**135**	**121**	**110**	**101**	**87**	**76**
2.2	1.20	1.06	**212**	**182**	**159**	**141**	**127**	**116**	**106**	**91**	**80**
2.5	1.26	1.12	**224**	**192**	**168**	**149**	**135**	**122**	**112**	**96**	**84**
2.8	1.32	1.17	**234**	**201**	**176**	**156**	**141**	**128**	**117**	**101**	**88**
3.0	1.36	1.20	**240**	**206**	**180**	**160**	**144**	**131**	**120**	**103**	**90**

AMAZONE - Spray table for three-ray nozzles (white)

Pres-sure	Nozzle output		AUS spray rate (l/ha) /								
	Water	AUS	6	7	8	9	10	11	12	14	16
(bar)	(l/min)		km/h								
1.0	1.16	1.03	**206**	**177**	**155**	**137**	**124**	**213**	**103**	**89**	**78**
1.2	1.27	1.12	**224**	**192**	**168**	**149**	**134**	**222**	**112**	**96**	**84**
1.5	1.42	1.26	**252**	**217**	**190**	**168**	**151**	**138**	**126**	**109**	**95**
1.8	1.56	1.38	**277**	**237**	**207**	**184**	**166**	**151**	**139**	**119**	**104**
2.0	1.64	1.45	**290**	**249**	**217**	**193**	**174**	**158**	**145**	**125**	**109**
2.2	1.73	1.54	**307**	**263**	**230**	**204**	**185**	**168**	**154**	**132**	**115**
2.5	1.84	1.62	**325**	**279**	**244**	**216**	**195**	**178**	**163**	**140**	**122**
2.8	1.93	1.71	**342**	**293**	**256**	**228**	**205**	**187**	**171**	**147**	**128**
3.0	2.01	1.78	**356**	**305**	**267**	**237**	**214**	**194**	**178**	**153**	**134**

16.4.2 Spray table for 7-hole nozzles

AMAZONE Spray table for 7-hole nozzle SJ7-02VP (yellow)

Pres-sure	Nozzle output per dosing disc		AUS spray rate AHL (l/ha) /								
	Wasser	AHL	6	7	8	9	10	11	12	14	16
(bar)	(l/min)		km/h								
1,5	0,55	0,49	**98**	**84**	**74**	**65**	**59**	**53**	**49**	**42**	**37**
2,0	0,64	0,57	**114**	**98**	**86**	**76**	**68**	**62**	**57**	**49**	**43**
2,5	0,72	0,64	**128**	**110**	**96**	**85**	**77**	**70**	**64**	**55**	**48**
3,0	0,80	0,71	**142**	**122**	**107**	**95**	**85**	**77**	**71**	**61**	**53**
3,5	0,85	0,75	**150**	**129**	**113**	**100**	**90**	**82**	**75**	**64**	**56**
4,0	0,93	0,82	**164**	**141**	**123**	**109**	**98**	**89**	**82**	**70**	**62**

AMAZONE Spray table for 7-hole nozzle SJ7-03VP (blue)

Pres-sure	Nozzle output per dosing disc		AUS spray rate AHL (l/ha) /								
	Wasser	AHL	6	7	8	9	10	11	12	14	16
(bar)	(l/min)		km/h								
1,5	0,87	0,77	**154**	**132**	**116**	**103**	**92**	**84**	**77**	**66**	**58**
2,0	1,00	0,88	**176**	**151**	**132**	**117**	**106**	**96**	**88**	**75**	**66**
2,5	1,10	0,97	**194**	**166**	**146**	**129**	**116**	**106**	**97**	**83**	**73**
3,0	1,18	1,04	**208**	**178**	**156**	**139**	**125**	**113**	**104**	**89**	**78**
3,5	1,27	1,12	**224**	**192**	**168**	**149**	**134**	**122**	**112**	**96**	**84**
4,0	1,31	1,16	**232**	**199**	**174**	**155**	**139**	**127**	**116**	**99**	**87**

AMAZONE Spray table for 7-hole nozzle SJ7-04VP (red)

Pres-sure	Nozzle output per dosing disc		AUS spray rate AHL (l/ha) /								
	Wasser	AHL	6	7	8	9	10	11	12	14	16
(bar)	(l/min)		km/h								
1,5	1,17	1,04	**208**	**178**	**156**	**139**	**125**	**113**	**104**	**89**	**78**
2,0	1,33	1,18	**236**	**202**	**177**	**157**	**142**	**129**	**118**	**101**	**89**
2,5	1,45	1,28	**256**	**219**	**192**	**171**	**154**	**140**	**128**	**110**	**96**
3,0	1,55	1,37	**274**	**235**	**206**	**183**	**164**	**149**	**137**	**117**	**103**
3,5	1,66	1,47	**295**	**253**	**221**	**196**	**177**	**161**	**147**	**126**	**110**
4,0	1,72	1,52	**304**	**261**	**228**	**203**	**182**	**166**	**152**	**130**	**114**

AMAZONE Spray table for 7-hole nozzle SJ7-05VP (brown)

Pres-sure	Nozzle output per dosing disc		AUS spray rate AHL (l/ha) /								
	Wasser	AHL	6	7	8	9	10	11	12	14	16
(bar)	(l/min)		km/h								
1,5	1,49	1,32	**264**	**226**	**198**	**176**	**158**	**144**	**132**	**113**	**99**
2,0	1,68	1,49	**298**	**255**	**224**	**199**	**179**	**163**	**149**	**128**	**112**
2,5	1,83	1,62	**324**	**278**	**243**	**216**	**194**	**177**	**162**	**139**	**122**
3,0	1,95	1,73	**346**	**297**	**260**	**231**	**208**	**189**	**173**	**148**	**130**
3,5	2,11	1,87	**374**	**321**	**281**	**249**	**224**	**204**	**187**	**160**	**140**
4,0	2,16	1,91	**382**	**327**	**287**	**255**	**229**	**208**	**191**	**164**	**143**

AMAZONE Spray table for 7-hole nozzle SJ7-06VP (grey)

Pres-sure	Nozzle output per dosing disc		AUS spray rate AHL (l/ha) /								
	Wasser	AHL	6	7	8	9	10	11	12	14	16
(bar)	(l/min)		km/h								
1,5	1,77	1,57	**314**	**269**	**236**	**209**	**188**	**171**	**157**	**135**	**118**
2,0	2,01	1,78	**356**	**305**	**267**	**237**	**214**	**194**	**178**	**153**	**134**
2,5	2,19	1,94	**388**	**333**	**291**	**259**	**233**	**212**	**194**	**166**	**146**
3,0	2,35	2,08	**416**	**357**	**312**	**277**	**250**	**227**	**208**	**178**	**156**
4,0	2,61	2,31	**562**	**396**	**347**	**308**	**277**	**252**	**231**	**198**	**173**

AMAZONE Spray table for 7-hole nozzle SJ7-08VP (white)

Pres-sure	Nozzle output per dosing disc		AUS spray rate AHL (l/ha) /								
	Wasser	AHL	6	7	8	9	10	11	12	14	16
(bar)	(l/min)		km/h								
1,5	2,28	2,02	**404**	**346**	**303**	**269**	**242**	**220**	**202**	**173**	**152**
2,0	2,66	2,35	**470**	**403**	**353**	**313**	**282**	**256**	**235**	**201**	**176**
2,5	2,94	2,60	**520**	**446**	**390**	**347**	**312**	**284**	**260**	**223**	**195**
3,0	3,15	2,79	**558**	**478**	**419**	**372**	**335**	**304**	**279**	**239**	**209**
4,0	3,46	3,06	**612**	**525**	**459**	**408**	**367**	**334**	**306**	**262**	**230**

16.4.3 Spray table for FD- nozzles

AMAZONE Spray table for FD-04- nozzle

Pres-sure	Nozzle output per dosing disc		AUS spray rate AHL (l/ha) /								
	Water	AHL	6	7	8	9	10	11	12	14	16
(bar)	(l/min)		km/h								
1,5	1,13	1,00	**200**	**171**	**150**	**133**	**120**	**109**	**100**	**86**	**75**
2,0	1,31	1,15	**230**	**197**	**173**	**153**	**138**	**125**	**115**	**99**	**86**
2,5	1,46	1,29	**258**	**221**	**194**	**172**	**155**	**141**	**129**	**111**	**97**
3,0	1,60	1,41	**282**	**241**	**211**	**188**	**169**	**154**	**141**	**121**	**106**
4,0	1,85	1,63	**326**	**279**	**245**	**217**	**196**	**178**	**163**	**140**	**122**

AMAZONE Spray table for FD-05- nozzle

Pres-sure	Nozzle output per dosing disc		AUS spray rate AHL (l/ha) /								
	Water	AHL	6	7	8	9	10	11	12	14	16
(bar)	(l/min)		km/h								
1,5	1,41	1,24	**248**	**213**	**186**	**165**	**149**	**135**	**124**	**106**	**93**
2,0	1,63	1,44	**288**	**247**	**216**	**192**	**173**	**157**	**144**	**123**	**108**
2,5	1,83	1,61	**322**	**276**	**242**	**215**	**193**	**176**	**161**	**138**	**121**
3,0	2,00	1,76	**352**	**302**	**264**	**235**	**211**	**192**	**176**	**151**	**132**
4,0	2,31	2,03	**406**	**348**	**305**	**271**	**244**	**221**	**203**	**174**	**152**

AMAZONE Spray table for FD-06- nozzle

Pres-sure	Nozzle output per dosing disc		AUS spray rate AHL (l/ha) /								
	Water	AHL	6	7	8	9	10	11	12	14	16
(bar)	(l/min)		km/h								
1,5	1,70	1,49	**298**	**255**	**224**	**199**	**179**	**163**	**149**	**128**	**112**
2,0	1,96	1,72	**344**	**295**	**258**	**229**	**206**	**188**	**172**	**147**	**129**
2,5	2,19	1,93	**386**	**331**	**290**	**257**	**232**	**211**	**193**	**165**	**145**
3,0	2,40	2,11	**422**	**362**	**317**	**282**	**253**	**230**	**211**	**181**	**158**
4,0	2,77	2,44	**488**	**418**	**366**	**325**	**293**	**266**	**244**	**209**	**183**

AMAZONE Spray table for FD-08- nozzle

Pres-sure	Nozzle output per dosing disc		AUS spray rate AHL (l/ha) /								
	Water	AHL	6	7	8	9	10	11	12	14	16
(bar)	(l/min)		km/h								
1,5	2,26	1,99	**398**	**341**	**299**	**265**	**239**	**217**	**199**	**171**	**149**
2,0	2,61	2,30	**460**	**394**	**345**	**307**	**276**	**251**	**230**	**197**	**173**
2,5	2,92	2,57	**514**	**441**	**386**	**343**	**308**	**280**	**257**	**220**	**193**
3,0	3,20	2,82	**563**	**483**	**422**	**375**	**338**	**307**	**282**	**241**	**211**
4,0	3,70	3,25	**650**	**557**	**488**	**433**	**390**	**355**	**325**	**279**	**244**

AMAZONE Spray table for FD-10- nozzle

Pres-sure	Nozzle output per dosing disc		AUS spray rate AHL (l/ha) /								
	Water	AHL	6	7	8	9	10	11	12	14	16
(bar)	(l/min)		km/h								
1,5	2,83	2,49	**498**	**427**	**374**	**332**	**299**	**272**	**249**	**214**	**187**
2,0	3,27	2,88	**576**	**494**	**432**	**384**	**345**	**314**	**288**	**246**	**216**
2,5	3,65	3,21	**642**	**551**	**482**	**429**	**385**	**350**	**321**	**275**	**241**
3,0	4,00	3,52	**704**	**604**	**528**	**469**	**422**	**384**	**352**	**302**	**264**
4,0	4,62	4,07	**813**	**697**	**610**	**542**	**488**	**444**	**407**	**348**	**305**

16.4.4 Spray table for drag hose unit

AMAZONE Spray table for dosing disc 4916-26, (dia. 0.65 mm)

Pres-sure	Nozzle output per dosing disc		AUS spray rate (l/ha) /								
	Water	AUS	6	7	8	9	10	11	12	14	16
(bar)	(l/min)		km/h								
1,0	0,20	0,18	**71**	**61**	**53**	**47**	**43**	**37**	**36**	**31**	**27**
1,2	0,22	0,19	**78**	**67**	**58**	**52**	**47**	**43**	**39**	**34**	**29**
1,5	0,24	0,21	**85**	**73**	**64**	**57**	**51**	**47**	**43**	**37**	**32**
1,8	0,26	0,23	**92**	**79**	**69**	**61**	**55**	**50**	**46**	**40**	**35**
2,0	0,28	0,25	**99**	**85**	**74**	**66**	**60**	**54**	**50**	**43**	**37**
2,2	0,29	0,26	**103**	**88**	**77**	**68**	**62**	**56**	**52**	**44**	**39**
2,5	0,31	0,27	**110**	**94**	**82**	**73**	**66**	**60**	**55**	**47**	**41**
2,8	0,32	0,28	**113**	**97**	**85**	**76**	**68**	**62**	**57**	**49**	**43**
3,0	0,34	0,30	**120**	**103**	**90**	**80**	**72**	**66**	**60**	**52**	**45**
3,5	0,36	0,32	**127**	**109**	**96**	**85**	**77**	**70**	**64**	**55**	**48**
4,0	0,39	0,35	**138**	**118**	**104**	**92**	**83**	**76**	**69**	**59**	**52**

AMAZONE Spray table with dosing disc 4916-32, (dia. 0.8 mm)

Pres-sure	Nozzle output per dosing disc		AUS spray rate (l/ha) /								
	Water	AUS	6	7	8	9	10	11	12	14	16
(bar)	(l/min)		km/h								
1,0	0,31	0,27	**110**	**94**	**82**	**73**	**66**	**60**	**55**	**47**	**41**
1,2	0,34	0,30	**120**	**103**	**90**	**80**	**72**	**66**	**60**	**52**	**45**
1,5	0,38	0,34	**135**	**115**	**101**	**90**	**81**	**74**	**68**	**58**	**51**
1,8	0,41	0,36	**145**	**124**	**109**	**97**	**87**	**79**	**73**	**62**	**55**
2,0	0,43	0,38	**152**	**130**	**114**	**101**	**92**	**83**	**76**	**65**	**57**
2,2	0,45	0,40	**159**	**137**	**119**	**106**	**96**	**87**	**80**	**69**	**60**
2,5	0,48	0,42	**170**	**146**	**127**	**113**	**102**	**93**	**85**	**73**	**64**
2,8	0,51	0,45	**181**	**155**	**135**	**120**	**109**	**98**	**91**	**78**	**68**
3,0	0,53	0,47	**188**	**161**	**141**	**125**	**113**	**103**	**94**	**81**	**71**
3,5	0,57	0,50	**202**	**173**	**151**	**135**	**121**	**110**	**101**	**87**	**76**
4,0	0,61	0,54	**216**	**185**	**162**	**144**	**130**	**118**	**108**	**93**	**81**

AMAZONE Spray table for dosing disc 4916-39, (dia. 1.0 mm) (standard)

Pres-sure	Nozzle output per dosing disc		AUS spray rate (l/ha) /								
	Water	AUS	6	7	8	9	10	11	12	14	16
(bar)	(l/min)		km/h								
1,0	0,43	0,38	**153**	**131**	**114**	**101**	**92**	**84**	**77**	**66**	**57**
1,2	0,47	0,41	**167**	**143**	**124**	**110**	**100**	**91**	**84**	**72**	**62**
1,5	0,53	0,47	**187**	**160**	**141**	**126**	**112**	**102**	**94**	**80**	**71**
1,8	0,58	0,51	**204**	**175**	**154**	**137**	**122**	**112**	**102**	**88**	**77**
2,0	0,61	0,53	**216**	**185**	**162**	**144**	**130**	**118**	**108**	**93**	**81**
2,2	0,64	0,56	**227**	**194**	**170**	**151**	**136**	**124**	**114**	**97**	**85**
2,5	0,68	0,59	**240**	**206**	**180**	**160**	**142**	**132**	**120**	**103**	**90**
2,8	0,71	0,62	**251**	**215**	**189**	**168**	**151**	**137**	**126**	**108**	**95**
3,0	0,74	0,64	**262**	**224**	**197**	**175**	**158**	**143**	**131**	**112**	**99**
3,5	0,79	0,69	**280**	**236**	**210**	**186**	**168**	**153**	**140**	**118**	**105**
4,0	0,85	0,74	**302**	**259**	**226**	**201**	**181**	**165**	**151**	**130**	**113**

AMAZONE Spray table for dosing disc 4916-45, (dia. 1.2 mm)

Pres-sure	Nozzle output per dosing disc		AUS spray rate (l/ha) /								
	Water	AUS	6	7	8	9	10	11	12	14	16
(bar)	(l/min)		km/h								
1,0	0,57	0,50	**202**	**173**	**151**	**135**	**121**	**110**	**101**	**87**	**76**
1,2	0,62	0,55	**219**	**188**	**165**	**146**	**132**	**120**	**110**	**94**	**83**
1,5	0,70	0,62	**248**	**212**	**186**	**165**	**149**	**135**	**124**	**106**	**93**
1,8	0,77	0,68	**273**	**234**	**204**	**182**	**164**	**148**	**137**	**117**	**102**
2,0	0,81	0,72	**287**	**246**	**215**	**192**	**172**	**157**	**144**	**123**	**108**
2,2	0,86	0,76	**304**	**261**	**228**	**203**	**183**	**166**	**152**	**131**	**114**
2,5	0,92	0,81	**326**	**279**	**244**	**217**	**196**	**178**	**163**	**140**	**122**
2,8	0,96	0,85	**340**	**291**	**255**	**227**	**204**	**186**	**170**	**146**	**128**
3,0	1,00	0,89	**354**	**303**	**266**	**236**	**213**	**193**	**177**	**152**	**133**
3,5	1,10	0,97	**389**	**334**	**292**	**260**	**234**	**213**	**195**	**167**	**146**
4,0	1,16	1,03	**411**	**352**	**308**	**274**	**246**	**224**	**206**	**176**	**154**

AMAZONE Spray table for dosing disc 4916-55, (dia. 1.4 mm)

Pres-sure	Nozzle output per dosing disc		AUS spray rate (l/ha) /								
	Water	AUS	6	7	8	9	10	11	12	14	16
(bar)	(l/min)		km/h								
1,0	0,86	0,76	**304**	**261**	**228**	**203**	**183**	**166**	**152**	**131**	**114**
1,2	0,93	0,82	**329**	**282**	**247**	**219**	**198**	**180**	**165**	**141**	**124**
1,5	1,05	0,93	**372**	**319**	**278**	**248**	**223**	**203**	**186**	**160**	**139**
1,8	1,15	1,02	**407**	**349**	**305**	**271**	**245**	**222**	**204**	**175**	**153**
2,0	1,22	1,08	**432**	**370**	**324**	**288**	**259**	**236**	**216**	**185**	**162**
2,2	1,27	1,12	**450**	**385**	**337**	**300**	**270**	**245**	**225**	**163**	**168**
2,5	1,35	1,19	**478**	**410**	**358**	**319**	**287**	**261**	**239**	**205**	**179**
2,8	1,43	1,27	**506**	**434**	**380**	**337**	**304**	**276**	**253**	**217**	**190**
3,0	1,47	1,30	**520**	**446**	**390**	**347**	**312**	**284**	**260**	**223**	**195**
3,5	1,59	1,41	**563**	**482**	**422**	**375**	**338**	**307**	**282**	**241**	**211**
4,0	1,69	1,50	**598**	**513**	**449**	**399**	**359**	**327**	**299**	**257**	**225**

16.5 Conversion table for spraying ammonium nitrate / urea solution (AUS) liquid fertiliser

(Density 1.28 kg/l, i.e. approx. 28 kg N for 100 kg of liquid fertiliser or 36 kg N for 100 litres of liquid fertiliser at 5 - 10 °C)

N kg	Sol. N l	Sol. N kg	N kg	Sol. N l	Sol. N kg	N kg	Sol. N l	Sol. N kg	N kg	Sol. N l	Sol. N kg
10	27.8	35.8	52	144.6	186.0	94	261.2	335.8	136	378.0	485.0
12	33.3	42.9	54	150.0	193.0	96	266.7	342.7	138	384.0	493.0
14	38.9	50.0	56	155.7	200.0	98	272.0	350.0	140	389.0	500.0
16	44.5	57.1	58	161.1	207.3	100	278.0	357.4	142	394.0	507.0
18	50.0	64.3	60	166.7	214.2	102	283.7	364.2	144	400.0	515.0
20	55.5	71.5	62	172.3	221.7	104	285.5	371.8	146	406.0	521.0
22	61.6	78.5	64	177.9	228.3	106	294.2	378.3	148	411.0	529.0
24	66.7	85.6	66	183.4	235.9	108	300.0	386.0	150	417.0	535.0
26	75.0	92.9	68	188.9	243.0	110	305.6	393.0	155	431.0	554.0
28	77.8	100.0	70	194.5	250.0	112	311.1	400.0	160	445.0	572.0
30	83.4	107.1	72	200.0	257.2	114	316.5	407.5	165	458.0	589.0
32	89.0	114.2	74	204.9	264.2	116	322.1	414.3	170	472.0	607.0
34	94.5	121.4	76	211.6	271.8	118	328.0	421.0	175	486.0	625.0
36	100.0	128.7	78	216.5	278.3	120	333.0	428.0	180	500.0	643.0
38	105.6	135.9	80	222.1	285.8	122	339.0	436.0	185	514.0	660.0
40	111.0	143.0	82	227.9	292.8	124	344.0	443.0	190	527.0	679.0
42	116.8	150.0	84	233.3	300.0	126	350.0	450.0	195	541.0	696.0
44	122.2	157.1	86	238.6	307.5	128	356.0	457.0	200	556.0	714.0
46	127.9	164.3	88	242.2	314.1	130	361.0	465.0			
48	133.3	171.5	90	250.0	321.7	132	367.0	471.0			
50	139.0	178.6	92	255.7	328.3	134	372.0	478.0			

AMAZONEN-WERKE
H. DREYER SE & Co. KG

Postfach 51
D-49202 Hasbergen-Gaste
Germany

Tel.:+ 49 (0) 5405 501-0
e-mail:amazone@amazone.de
http://www.amazone.de